ENGINE
6A1 SERIES

CONTENTS

NOTES

GENERAL INFORMATION

GENERAL SPECIFICATIONS

Descriptions			6A12	6A13
Type			60° V, OHV, DOHC (for each bank)	60° V, OHV, SOHC (for each bank)
Number of cylinders			6	6
Combustion chamber			Pentroof type	Pentroof type
Total displacement dm^3			1,998	2,498
Cylinder bore mm			78.4	81.0
Piston stroke mm			69.0	80.8
Compression ratio			10.0	9.5*1 or 9.0*2
Valve timing	Intake valve	Opens (BTDC)	15° (Low-speed cam) 37.5° (High-speed cam)	15°
		Closes (ABDC)	41° (Low-speed cam) 82.5° (High-speed cam)	53°
	Exhaust valve	Opens (BBDC)	41° (Low-speed cam) 75° (High-speed cam)	53°
		Closes (ATDC)	15° (Low-speed cam) 30° (High-speed cam)	15°
Lubrication system			Pressure feed, full-flow filtration	Pressure feed, full-flow filtration
Oil pump type			Trochoid type	Trochoid type
Cooling system			Water-cooled forced circulation	Water-cooled forced circulation
Water pump type			Centrifugal impeller type	Centrifugal impeller type

NOTE
*1: Europe and Hong Kong
*2: GCC and Export

1. SPECIFICATIONS

SERVICE SPECIFICATIONS

Items			Standard value	Limit
Timing belt				
Auto tensioner rod projection mm			12.0	-
Auto tensioner rod pushed-in amount (when pushed with a force of 98 - 196 N) mm			1.0 or less	-
Rocker arm and camshaft <SOHC>				
Camshaft cam height mm	Intake		35.20	34.70
	Exhaust		34.70	34.20
Camshaft journal diameter mm			45	-
Rocker cover and camshaft <MIVEC>				
Camshaft cam height mm	Intake	(Low-speed cam)	34.34	33.84
		(High-speed cam)	36.46	35.96
	Exhaust	(Low-speed cam)	34.40	33.90
		(High-speed cam)	35.86	35.36
Camshaft journal diameter mm			26	-
Valve clearance mm	Intake		0.10	-
	Exhaust		0.13	-
Cylinder head and valve				
Flatness of cylinder head gasket surface mm			-	-
Cylinder head gasket surface grinding limit (including grinding of cylinder block gasket surface) mm			Less than 0.03	-
Cylinder head overall height mm	SOHC		119.9 - 120.1	-
	MIVEC		119.6 - 119.8	-
Cylinder head bolt nominal length mm			-	96.4
Valve margin mm	Intake		1.0	0.5
	Exhaust		1.3	0.8
Valve stem diameter mm			6.0	-
Valve stem-to-guide clearance mm	Intake		0.02 - 0.05	0.10
	Exhaust		0.04 - 0.07	0.15
Valve face angle			45° - 45.5°	-
Valve stem projection mm	SOHC		48.45	48.95
	MIVEC		48.40	48.90

Items			Standard value	Limit
Overall valve length mm	Intake	SOHC	113.02	112.52
		MIVEC	112.37	111.87
	Exhaust	SOHC	115.32	114.82
		MIVEC	110.74	110.74
Valve spring free height mm	SOHC		49.9	48.9
	MIVEC		51.5	50.5
Valve spring load/installed height N/mm	SOHC		265/43.4	-
	MIVEC		255/44.5	-
Valve spring squareness			2°	4°
Valve seat contact width mm			0.9 - 1.3	-
Valve guide internal diameter mm			6.6	-
Valve guide projection mm	SOHC		14.0	-

Items		Standard value	Limit
Crankshaft journal diameter mm	6A12	53.0	-
	6A13	56.0	-
Crankshaft pin diameter mm	6A12	43.0	-
	6A13	51.0	-
Crankshaft journal oil clearance mm		0.02 - 0.04	0.1
Cylinder block gasket surface flatness mm		0.05	-
Cylinder block gasket surface grinding limit (including grinding of cylinder head gasket surface) mm		-	0.2
Cylinder block overall height mm	6A12	190.0	-
	6A13	209.0	-
Cylinder block cylindricity mm		0.01 or less	-
Cylinder block internal diameter mm	6A12	78.4	-
	6A13	81.0	-
Bearing cap bolt nominal length mm		-	71.1
Piston-to-cylinder clearance mm		0.02 - 0.04	-

REWORK DIMENSIONS

Item			Standard
Cylinder head and valves			
Cylinder head oversize valve guide hole diameter mm		0.05 O.S.	11.05 - 11.07
		0.25 O.S.	11.25 - 11.27
		0.50 O.S.	11.50 - 11.52
Oversize intake valve seat ring hole diameter mm	SOHC	0.3 O.S.	29.80 - 29.82
		0.6 O.S.	30.10 - 30.12
	MIVEC	0.3 O.S.	32.30 - 32.32
		0.6 O.S.	32.60 - 32.62
Oversize exhaust valve seat ring diameter mm	SOHC	0.3 O.S.	27.80 - 27.82
		0.6 O.S.	28.10 - 28.12
	MIVEC	0.3 O.S.	29.80 - 29.82
		0.6 O.S.	30.10 - 30.12

TORQUE SPECIFICATION

Items	Nm
Alternator and drive belt	
Alternator pivot nut	44
Alternator bolt	21
Oil level gauge guide	23
Tensioner pulley	15
Engine hanger	23
Tensioner pulley bracket A	45
Crankshaft bolt	182
Engine cover	3
Timing belt	
Timing belt front cover	11
Engine support bracket	49
Angle sensor	9
Angle sensor connector bracket	11
Tensioner pulley	48
Tensioner arm	24
Auto tensioner	21
Camshaft sprocket bolt	88
Idler pulley	35
Timing belt rear cover	11
Angle sensor connector bracket	11
Fuel and emission control parts	
Air intake plenum stay	18
Connector bracket	11
EGR valve	22
Throttle body	12
Air intake plenum	18
Delivery pipe	12
Fuel pipe	9
Fuel pressure regulator	9
Alternator bracket	23

Items	Nm
Arm spring holder	11
Rocker arm and rocker shaft cap <MIVEC>	
Rocker shaft cap	11
Cylinder head and valves	
Cylinder head bolt	20 + 120° + 120°
Oil pan and oil pump	
Oil pressure switch	10
Oil filter cover	21
Water hose	30
Bolt	68
Drain plug	39
Oil level sensor	9
Oil pan	7
Oil screen	19
Baffle plate	9
Relief plug	44
Oil pump case	14
Oil pump case cover	12
Piston and connecting rod	
Connecting rod	18 + 90° - 100°
Crankshaft, cylinder block, flywheel and drive plate	
Detonation sensor	23
Idler pulley bracket	35
Flywheel bolt	98
Drive plate bolt	98
Rear plate	11
Bell housing cover	9
Oil seal case	11
Bearing cap bolt	25 + 90° - 100°

NEW TIGHTENING METHOD - BY USE OF BOLTS TO BE TIGHTENED IN PLASTIC AREA

A new type of bolts, to be tightened in plastic area, is currently used in some parts of the engine. The tightening method for the bolts is different from the conventional one. Be sure to observe the method described in the text when tightening the bolts.
Service limits are provided for the bolts. Make sure that the service limits described in the text are strictly observed.

- Areas where the bolts are in use:
  (1) Cylinder head bolts
  (2) Main bearing cap bolts
  (3) Connecting rod cap bolts
- Tightening Method
  After tightening the bolts to the specified torque, tighten them another 90° to 100°, or 240° (twice 120°). The tightening method varies on different areas. Observe the tightening method described in the text.

SEALANTS

Item	Specified sealant	Quantity
Water pump*	Mitsubishi Genuine Part No. MD970389 or equivalent	As required
Water outlet fitting*	Mitsubishi Genuine Part No. MD970389 or equivalent	As required
Engine coolant temperature sensor	3M Nut Locking Part No. 4171 or equivalent	As required
Engine coolant temperature gauge unit	3M ATD Part No. 8660 or equivalent	As required
Camshaft bearing	3M ATD Part No. 8660 or equivalent	As required
Cam cap	3M ATD Part No. 8660 or equivalent	As required
Oil control valve	3M ATD Part No. 8660 or equivalent	As required
Camshaft holder*	Mitsubishi Genuine Part No. MD970389 or equivalent	As required
Rocker cover	3M ATD Part No. 8660 or equivalent	As required
Oil pump case*	Mitsubishi Genuine Part No. MD970389 or equivalent	As required
Oil pan*	Mitsubishi Genuine Part No. MD970389 or equivalent	As required
Oil pressure switch	3M ATD Part No. 8660 or equivalent	As required
Oil seal case*	Mitsubishi Genuine Part No. MD970389 or equivalent	As required
Drive plate bolt	3M Nut Locking Part No. 4171 or equivalent	As required
Flywheel bolt	3M Nut Locking Part No. 4171 or equivalent	As required

*: parts sealed by foam-in-place gasket (FIPG)

FORM-IN-PLACE GASKET (FIPG)

The engine has several areas where the form-in-place gasket (FIPG) is in use. To ensure that the gasket

2. SPECIAL TOOLS

Tool	Number	Name	Use
	MB990685	Torque wrench	Adjustment of timing belt tension
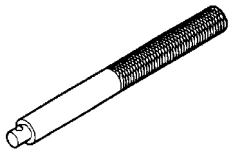	MB990938	Handle	Use with MD998776
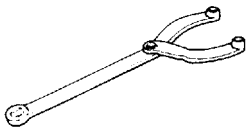	MB990767	Crankshaft pulley holder	Holding camshaft sprocket when loosening and tightening of bolt. Use with MD998719
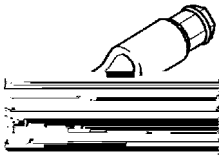	MB991477	Valve adjusting wrench	Adjustment of valve clearance (MIVEC)
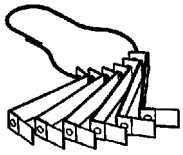	MB991478	Valve adjusting wrench feeler gauge set	Adjustment of valve clearance (MIVEC)
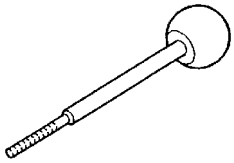	MB991479	Rocker arm piston checker	Adjustment of valve clearance (MIVEC)
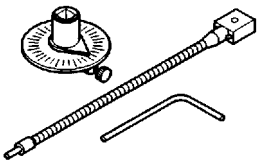	MB991614	Angle gauge	Tightening cylinder head bolt
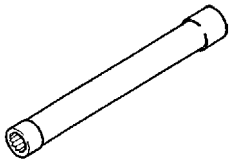	MB991653	Cylinder head bolt wrench	Tightening and loosening of cylinder head bolt
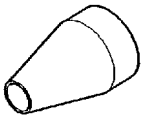	MB991659	Guide D	Removal of piston pin (Use with MD998780)

Tool	Number	Name	Use
	MD998440	Leak-down tester	Leak-down test of lash adjuster
	MD998441	Lash adjuster retainer	Air bleeding of lash adjuster
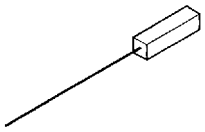	MD998442	Air bleed wire	Air bleeding of lash adjuster
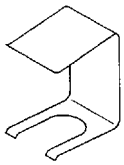	MD998443	Lash adjuster holder	Retainer for holding lash adjuster in rocker arm at time of removal and installation of rocker arm and rocker shaft assembly
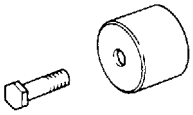	MD998713	Camshaft oil seal installer	Installation of camshaft oil seal
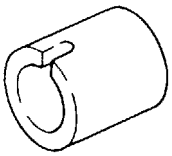	MD998716	Crankshaft wrench	Rotation of crankshaft when installing piston and timing belt.
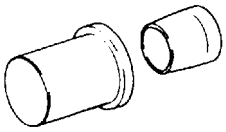	MD998717	Crankshaft front oil seal installer	Installation of crankshaft front oil seal
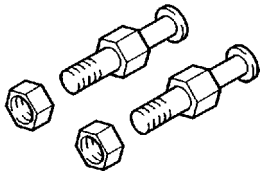	MD998719	Pulley holder pin (2)	Use with MB990767
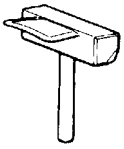	MD998727	Oil pan remover	Removal of oil pan

Tool	Number	Name	Use
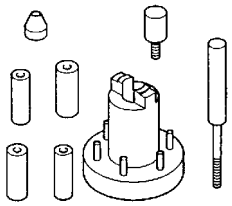	MD998780	SETTING TOOL Piston pin	Removal and installation of piston pin
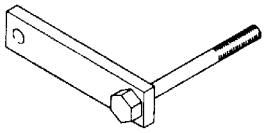	MD998781	Flywheel stopper	Holding flywheel and drive plate
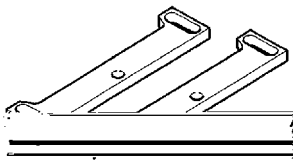	MD998784	Valve spring compressor adapter	Compression of valve spring (MIVEC) (Use with MD998772)

3. DRIVE BELT

REMOVAL AND INSTALLATION <SOHC>

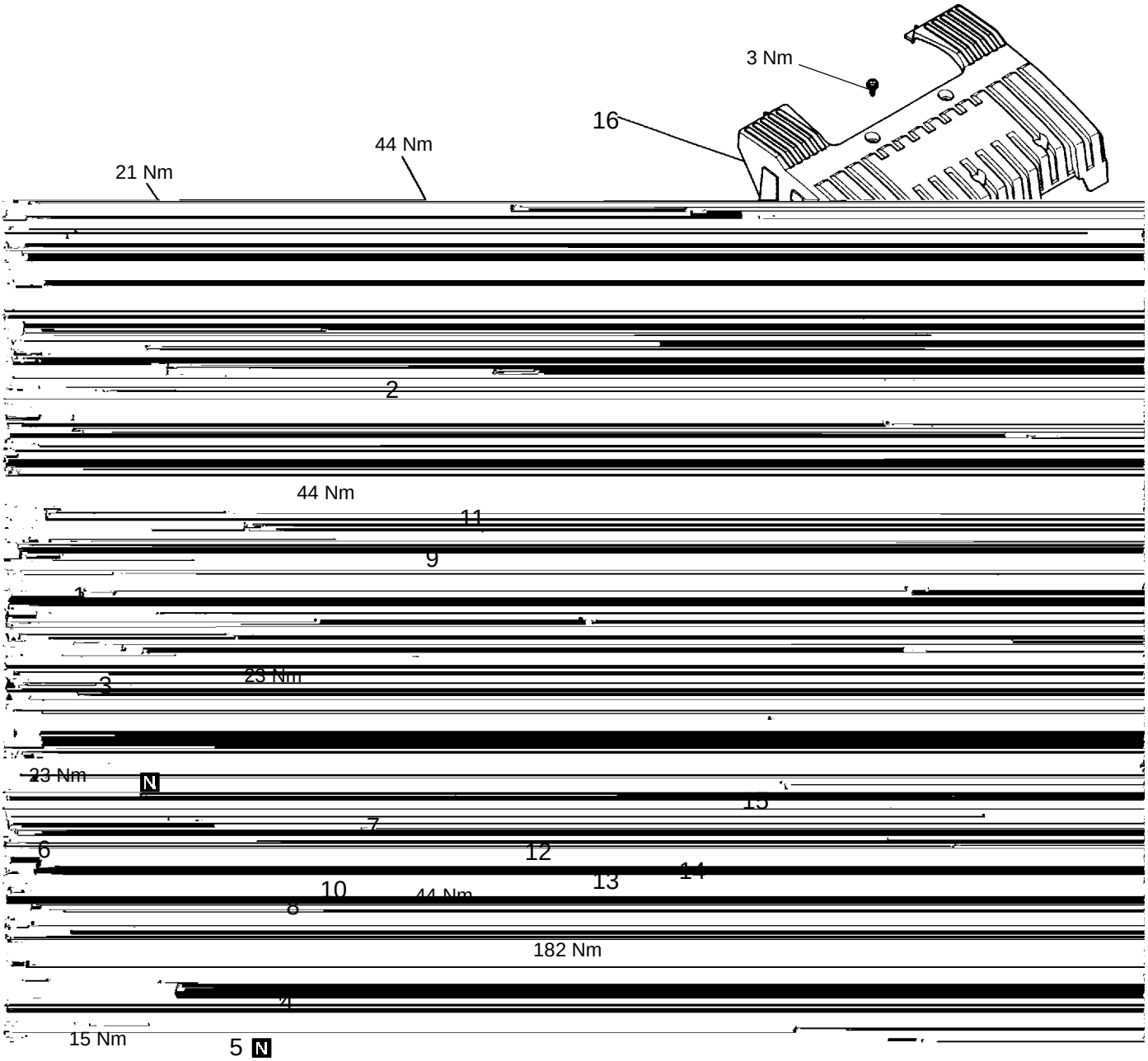

Removal steps

1. Drive belt
2. Alternator
3. Oil level gauge (dipstick)
4. Oil level gauge guide
5. O-ring
6. Tensioner pulley
7. Engine hanger
8. Tensioner pulley bracket A
9. Tensioner pulley bracket B
10. Adjusting stud
11. Adjusting bolt
12. Crankshaft bolt
13. Special washer
14. Crankshaft pulley
15. Flange
16. Engine cover

A A" " AA

REMOVAL AND INSTALLATION <MIVEC>

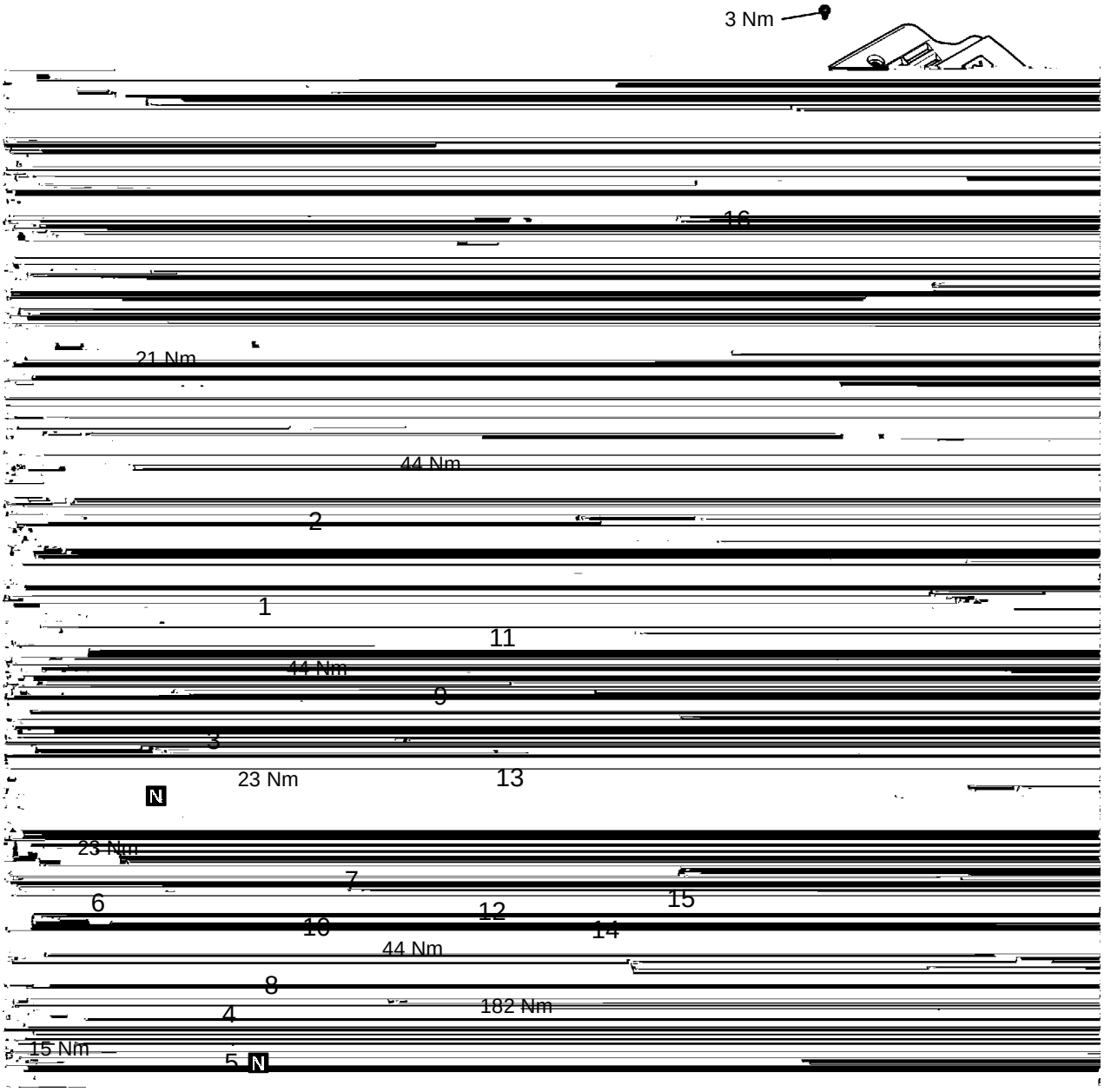

Removal steps

1. Drive belt
2. Alternator
3. Oil level gauge (dipstick)
4. Oil level gauge guide
5. O-ring
6. Tensioner pulley
7. Engine hanger
8. Tensioner pulley bracket A
9. Tensioner pulley bracket B
10. Adjusting stud
11. Adjusting bolt
12. Crankshaft bolt
13. Special washer
14. Crankshaft pulley
15. Flange
16. Engine cover

A A" " AA

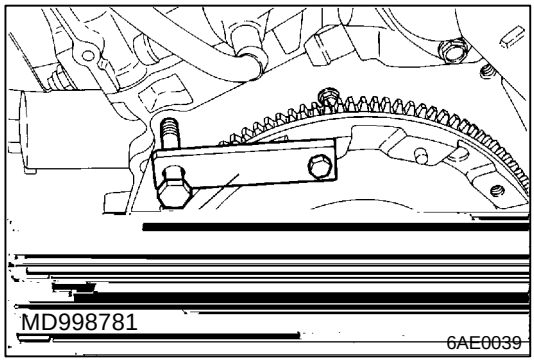

REMOVAL SERVICE POINTS

A A" CRANKSHAFT PULLEY BOLT REMOVAL

(1) Hold the flywheel or drive plate in position with the special tool before removing the crankshaft pulley bolts.

INSTALLATION SERVICE POINTS

" AA CRANKSHAFT PULLEY BOLT INSTALLATION

(1) Hold the flywheel or drive plate in position with the special tool before installing the crankshaft pulley bolts.

4. TIMING BELT

REMOVAL AND INSTALLATION <SOHC>

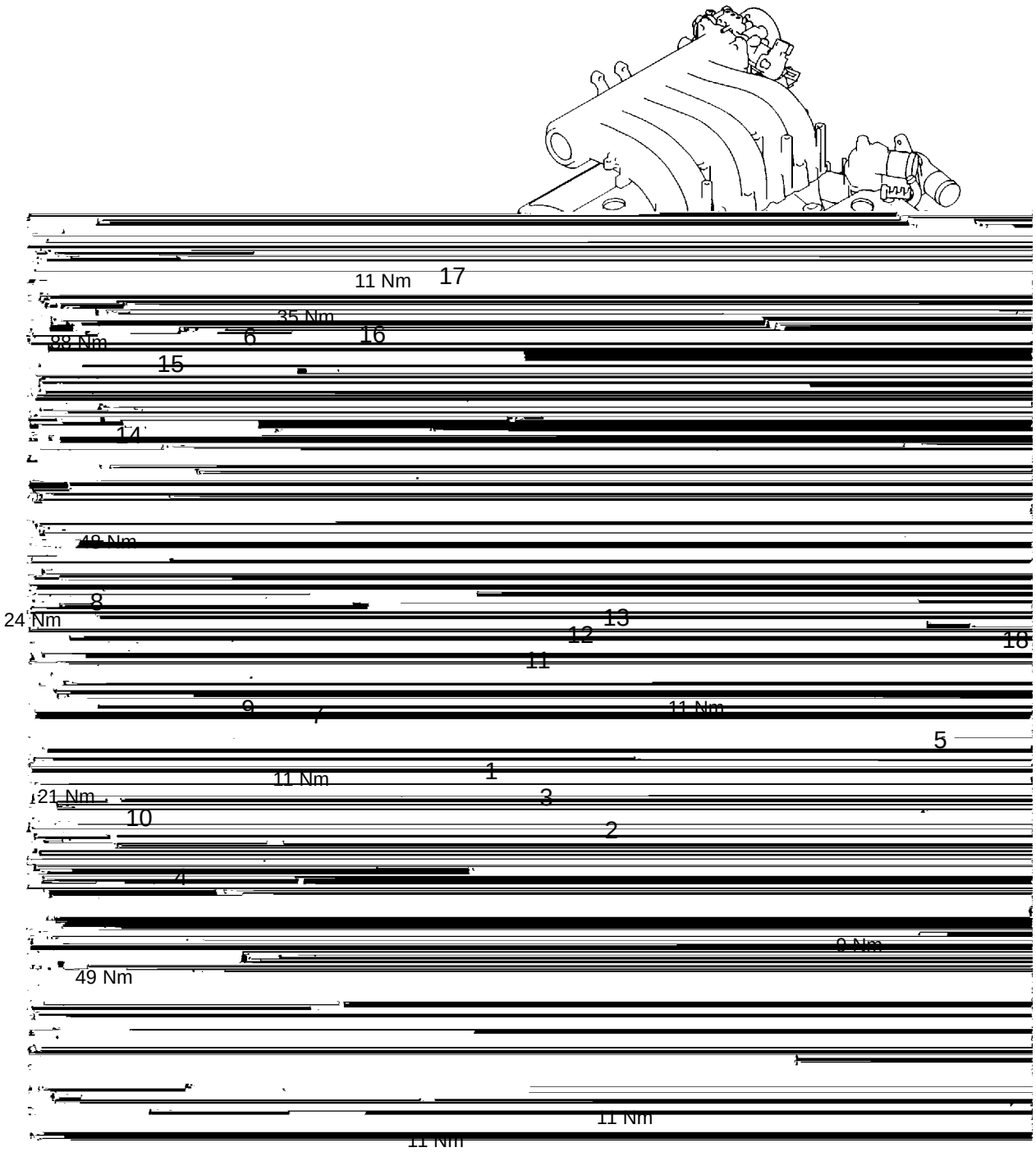

Removal steps

1. Timing belt front cover, upper right
2. Timing belt front cover, upper left
3. Timing belt front cover, lower
4. Engine support bracket
5. Angle sensor
A A" " CA 6. Timing belt
7. Tensioner pulley
8. Tensioner arm
9. Tensioner spacer
" BA 10. Auto tensioner
11. Crankshaft sprocket
12. Sensing plate
13. Crankshaft spacer
A B" " AA 14. Camshaft sprocket bolt
15. Camshaft sprocket
16. Idler pulley
17. Timing belt rear cover, center
18. Connector bracket

REMOVAL AND INSTALLATION <MIVEC>

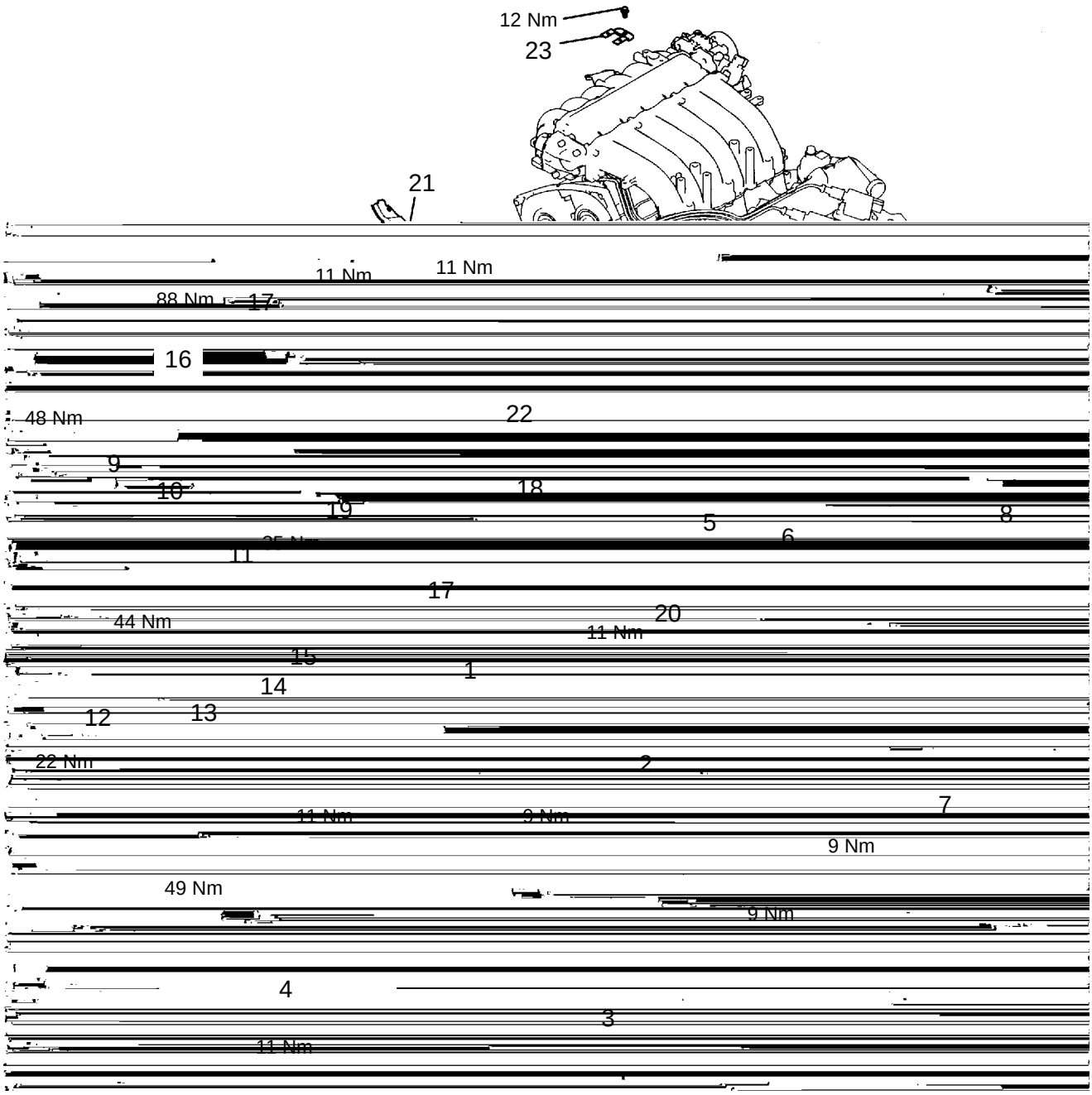

Removal steps

1. Timing belt front cover, upper right
2. Timing belt front cover, upper left
3. Timing belt front cover, lower
4. Engine support bracket
5. Angle sensor
6. Angle sensor
7. Spacer
8. Timing belt
9. Tensioner pulley
10. Tensioner arm
11. Tensioner spacer
12. Auto tensioner
13. Crankshaft sprocket
14. Sensing plate
15. Washer
16. Camshaft sprocket bolt
17. Camshaft sprocket
18. Camshaft sprocket with sensing plate
19. Idler pulley
20. Timing belt rear cover, left
21. Timing belt rear cover, right
22. Timing belt rear cover, center
23. Connector bracket

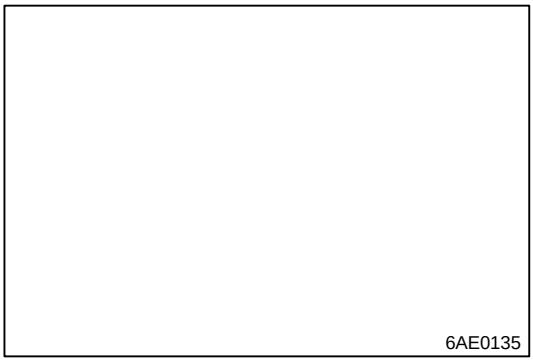

REMOVAL SERVICE POINTS

A A" TIMING BELT REMOVAL

(1) Mark the belt running direction for reference in reinstallation.
(2) Loosen the bolt that secures the tensioner pulley to remove the timing belt.

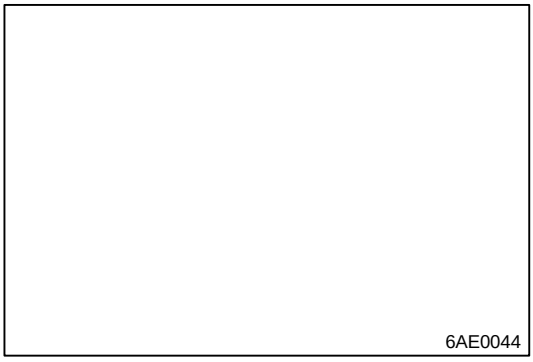

A B" CAMSHAFT SPROCKET BOLT REMOVAL

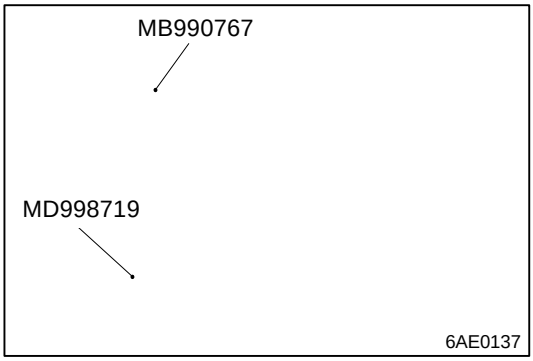

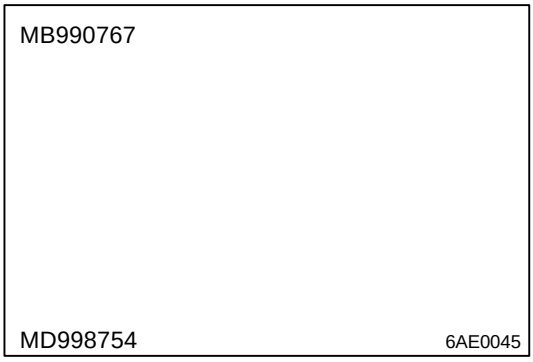

INSTALLATION SERVICE POINTS

" AA CAMSHAFT SPROCKET BOLT INSTALLATION

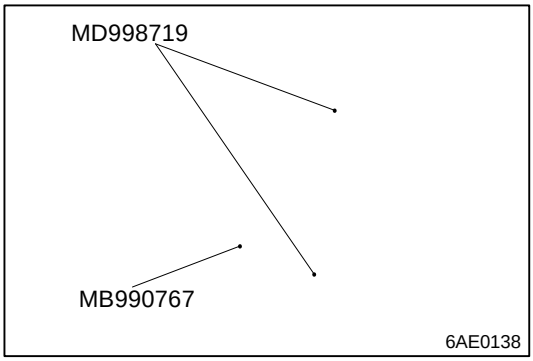

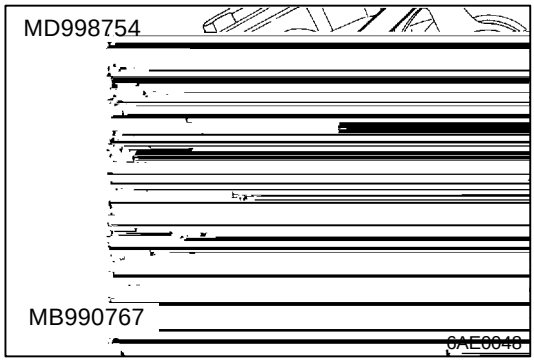

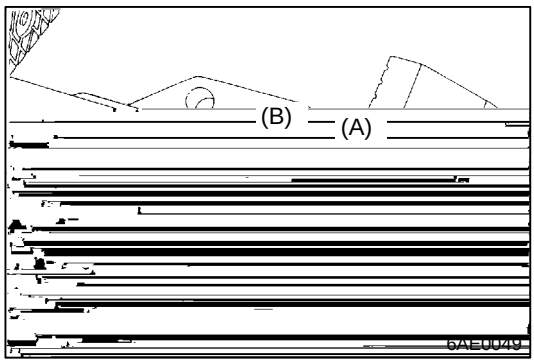

" BA AUTO TENSIONER SETTING

(1) Set the auto tensioner in a vice, while making sure it is not tilted.
(2) Slowly close the vice to force the rod in until the set hole (A) of the rod is lined up with the set hole (B) of the cylinder.

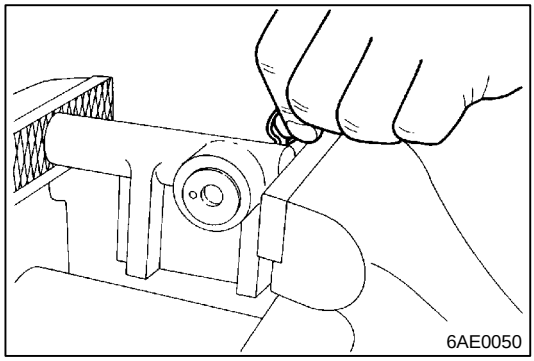

(3) Insert a 1.4 mm wire in the set hole.
(4) Remove the auto tensioner from the vice.

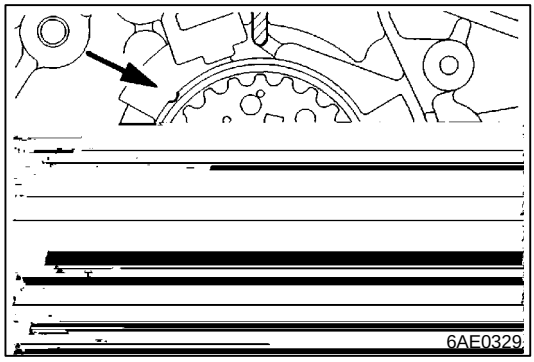

" CA TIMING BELT INSTALLATION

(1) Turn the crankshaft sprocket so that its timing mark will be away from the mating timing mark by approx. three teeth.

Caution

D If the timing marks are aligned, the piston is brought to the TDC. When the camshaft is turned under this condition, the valves may interfere with the piston.

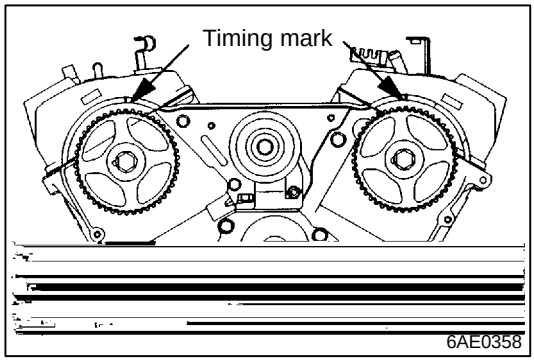

(2) Bring the timing marks of the camshaft sprockets as shown in the illustration.

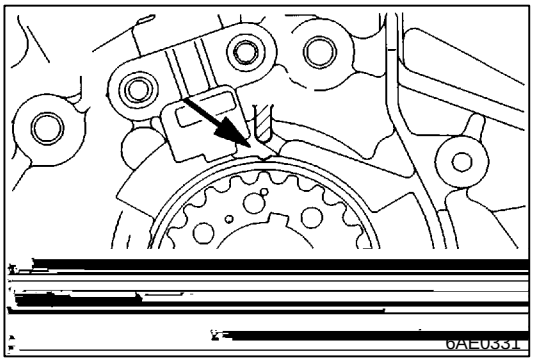

(3) Align the timing mark on the crankshaft sprocket with that on the cylinder block side.
(4) Fit the timing belt on the sprockets in the following order:
  1) Fit the timing belt on the crankshaft sprocket and then, while giving tension to the belt, fit it on the water pump sprocket.
  2) Fit the belt on the left bank camshaft sprocket.
  3) Fit the belt on the idler pulley while keeping it tight.
  4) Align the timing mark on the right bank camshaft sprocket with the mark on the cylinder block, and then fit the belt on the camshaft sprocket.

Caution
D The camshaft sprockets are prone to rotate. Avoid giving excessive tension to the timing belt when it is fitted.

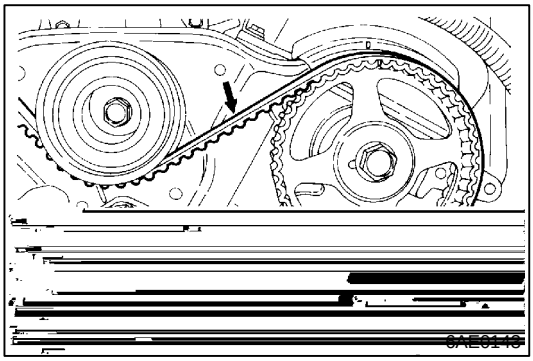

5) Make sure that the left bank portion of the belt is not slack when the belt is fitted on the tensioner pulley. If it is slack, remove the belt and fit it again beginning with the first step.

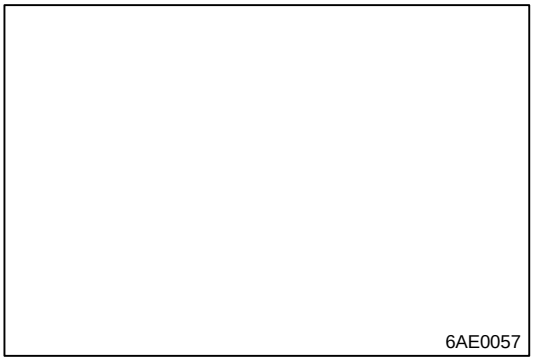

(5) Move the tensioner pulley in the direction of the arrow and hold it in raised position by tightening the tensioner pulley bolt.
(6) Check that all timing marks are aligned correctly.
(7) Turn the crankshaft counterclockwise a quarter turn.
(8) Turn back the crankshaft clockwise until the timing marks align again.

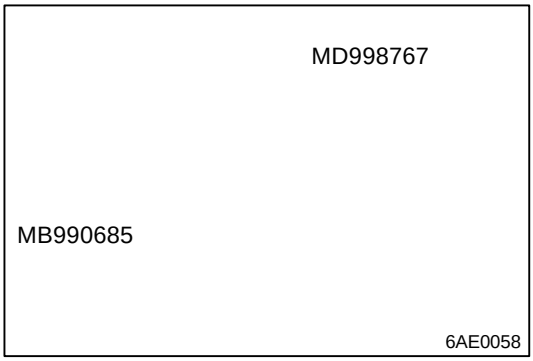

(9) Install the special tool and a torque wrench of 0 - 5 Nm to the tensioner pulley.
(10) Torque the tensioner pulley to 3 Nm with the torque wrench.
(11) While holding the tensioner pulley, tighten the center bolt to specification.
(12) Turn the crankshaft clockwise 2 turns and let it stand for about 5 minutes.

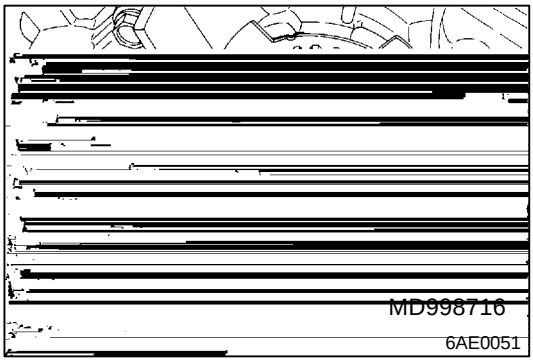

" DA TIMING BELT INSTALLATION

(1) Turn the crankshaft sprocket so that its timing mark will be away from the mating timing mark by approx. three teeth.

Caution

D If the timing marks are aligned, the piston is brought to the TDC. When the camshaft is turned under this condition, the valves may interfere with the piston.

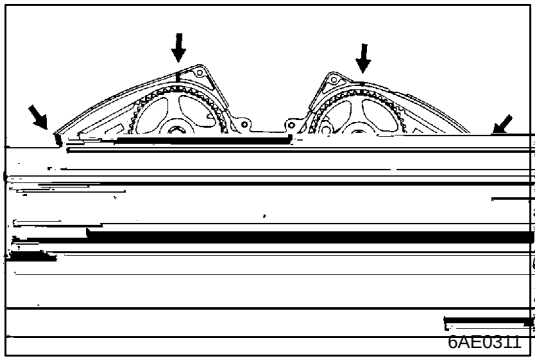

(2) Bring the timing marks of the camshaft sprockets as shown in the illustration.

Caution

D If one of the camshaft sprockets on the right bank is turned with the timing mark on the other sprocket aligned, there may be danger for the intake and exhaust valves to interfere with each other.

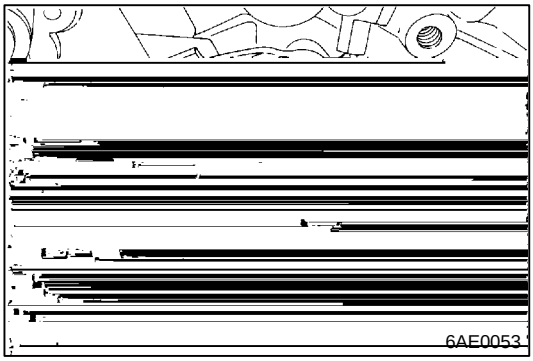

(3) Align the timing mark on the crankshaft sprocket with the mating timing mark, and then turn the crankshaft counterclockwise by one tooth.

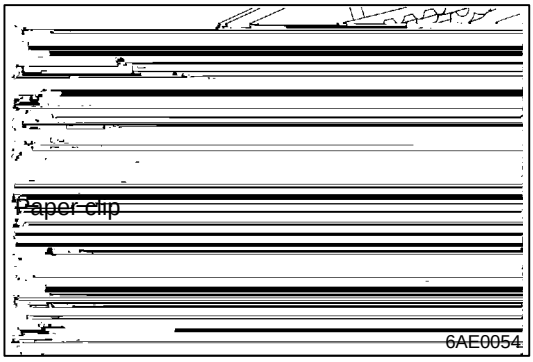

(4) Place the timing belt over the sprockets in the following method.

Caution

D The camshaft sprockets on the right bank can turn very easily because of the valve spring tension. Use care not to allow your fingers to get caught between the sprockets.

1) Align the timing mark of the right bank exhaust camshaft sprocket with the mating timing mark and hold the timing belt on the sprocket with a paper clip.

2) Align the timing mark of the intake camshaft sprocket and place the timing belt around that sprocket. Then, clip the belt at the location shown.

Caution

D The camshaft sprockets can turn easily and do not give excessive tension to the timing belt.

3) Place the timing belt around the idler pulley.

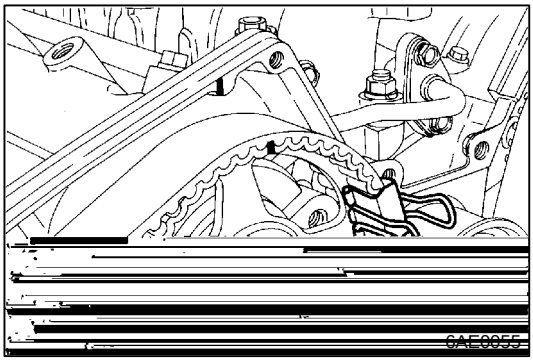

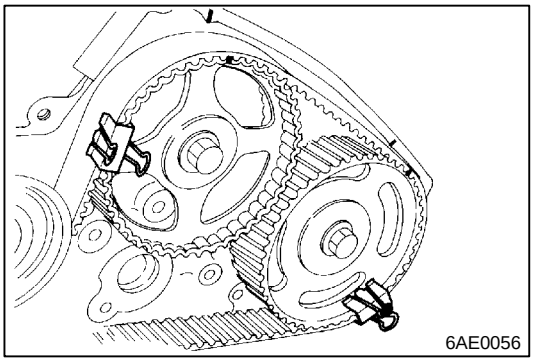

4) On the left bank, make sure that the timing marks of the camshaft sprockets are aligned and then hold the timing belt on these sprockets with paper clips.
5) Place the timing belt around the water pump pulley.
6) Place the timing belt around the crankshaft sprocket.
7) Place the timing belt around the tensioner pulley.

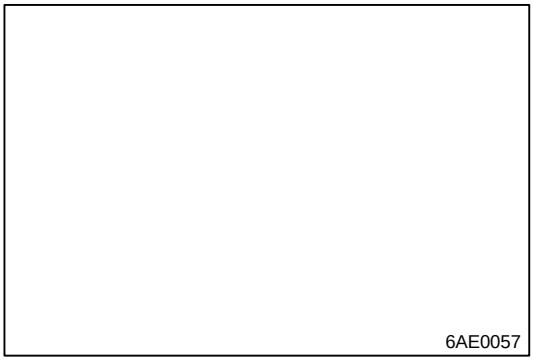

(5) Move the tensioner pulley in the direction of the arrow and hold it in raised position by tightening the tensioner pulley bolt.
(6) Check that all timing marks are aligned correctly.
(7) Turn the crankshaft counterclockwise a quarter turn.
(8) Turn back the crankshaft clockwise until the timing marks align again.

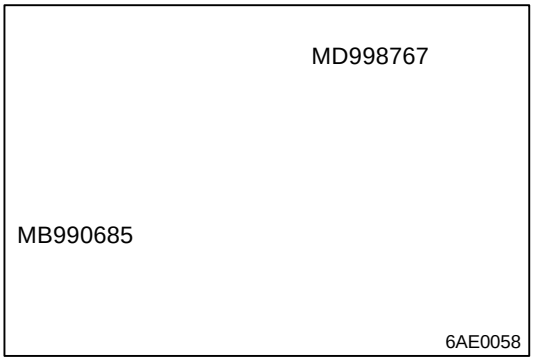

(9) Install the special tool and a torque wrench of 0 - 5 Nm to the tensioner pulley.
(10) Torque the tensioner pulley to 3 Nm with the torque wrench.
(11) While holding the tensioner pulley, tighten the center bolt to specification.
(12) Turn the crankshaft clockwise 2 turns and let it stand for about 5 minutes.

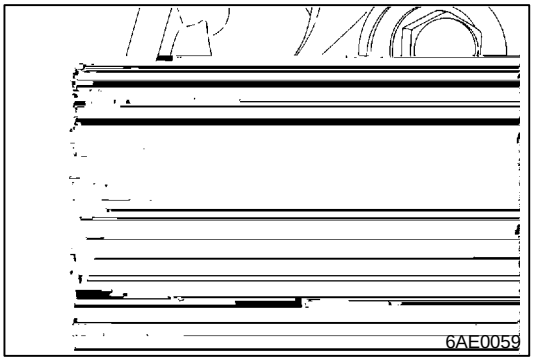

(13) Make sure that the wire, which has been inserted when installing the auto tensioner, can be removed easily. Belt tension should be acceptable if the wire can be easily removed. Remove the wrench. The belt tension can also be verified by checking the protrusion amount of the auto tensioner rod which should conform to the following.

Standard value: 3.8 - 4.5 mm

(14) If the wire cannot be removed easily or the rod protrusion is not up to specification, repeat steps (9) through (12) to obtain the correct tension.

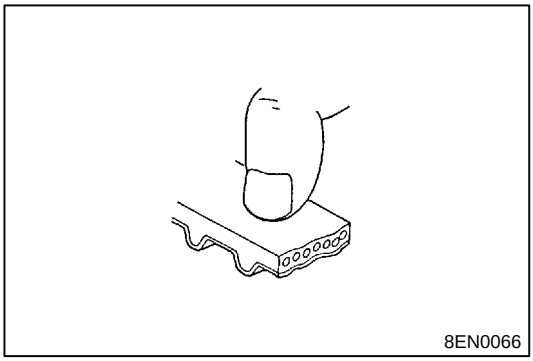

INSPECTION

TIMING BELT

Replace belt if any of the following conditions exist.
(1) Hardening of back rubber.
Back side is glossy without resilience and leaves no indent when pressed with fingernail.

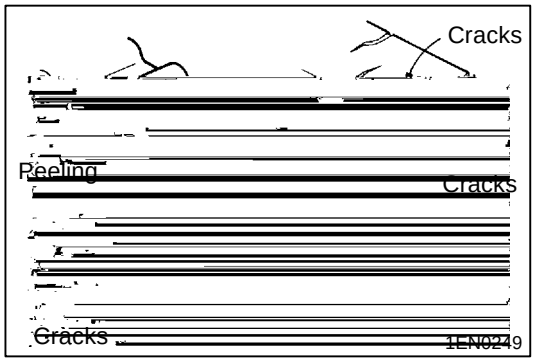

(2) Cracks on rubber back.
(3) Cracks or peeling of canvas.
(4) Cracks on tooth bottom.
(5) Cracks or belt sides.

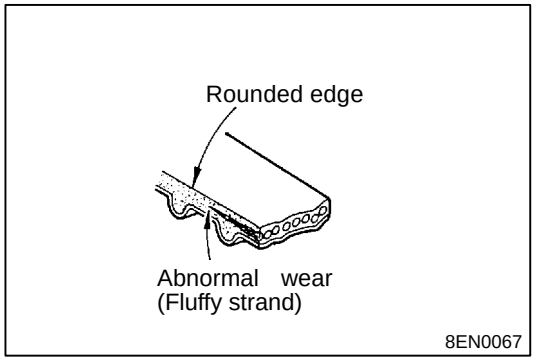

(6) Abnormal wear of belt sides. The sides are normal if they are sharp as if cut by a knife.

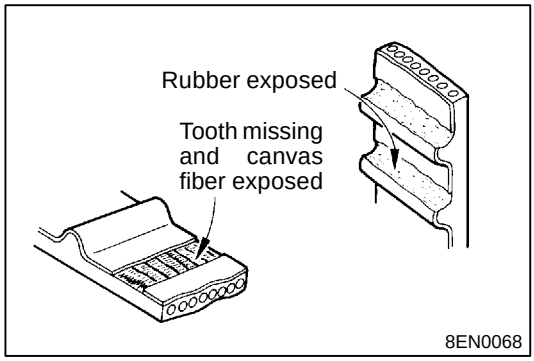

(7) Abnormal wear on teeth.
(8) Missing tooth.

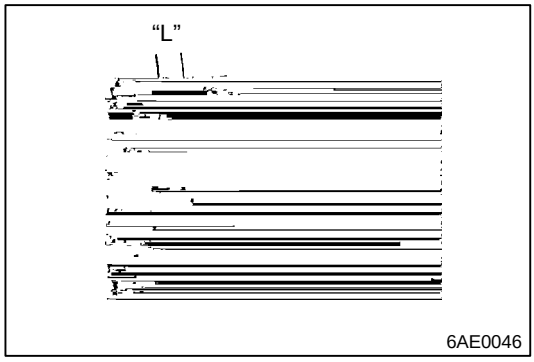

AUTO-TENSIONER

(1) Check for oil leaks. If oil leaks are evident, replace the auto-tensioner.
(2) Check the rod end for wear or damage and replace the auto-tensioner if necessary.
(3) Measure the rod projection length "L". If the reading is outside the standard value, replace the auto tensioner.

Standard value "L": 12 mm

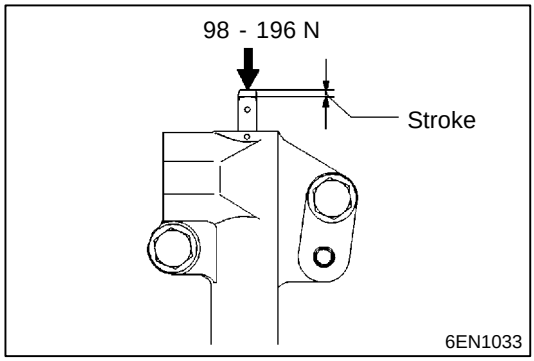

(4) Press the rod by a force of 98 to 196 N and measure the rod stroke. If the measured value exceeds the standard value, replace the tensioner.

Standard value: 1 mm or less

5. FUEL AND EMISSION CONTROL PARTS

REMOVAL AND INSTALLATION <SOHC>

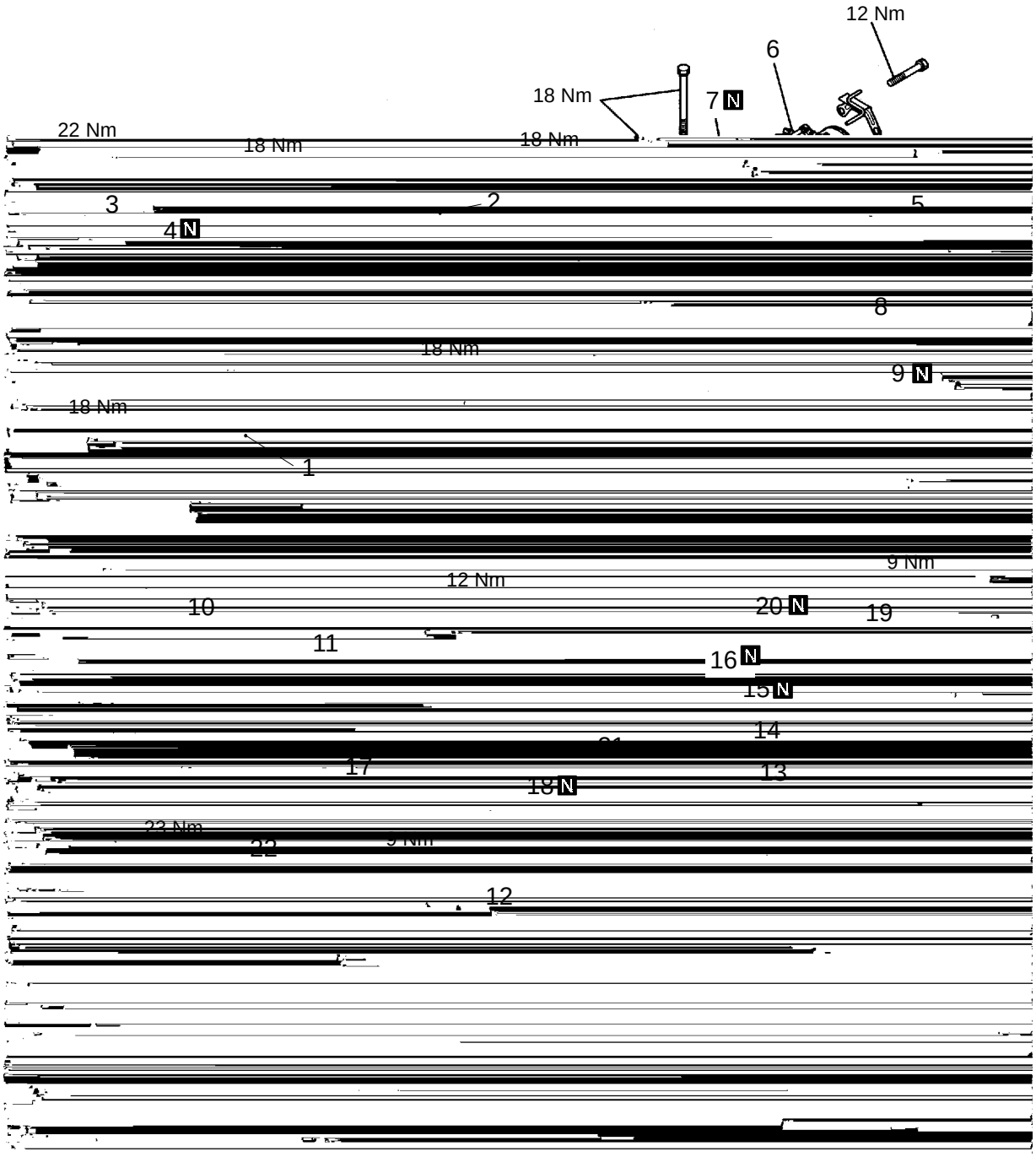

Removal steps

1. Air intake plenum stay, front
2. Air intake plenum stay, rear
3. EGR valve
4. Gasket
5. Vacuum pipe
6. Throttle body
" CA 7. Gasket
8. Air intake plenum
9. Gasket
10. Control harness
11. Delivery pipe and injector
12. Insulator
13. Insulator
" BA 14. Injector
15. Grommet
16. O-ring
17. Fuel pipe
18. O-ring
" AA 19. Fuel pressure regulator
20. O-ring
21. Delivery pipe
22. Alternator bracket

REMOVAL AND INSTALLATION <MIVEC>

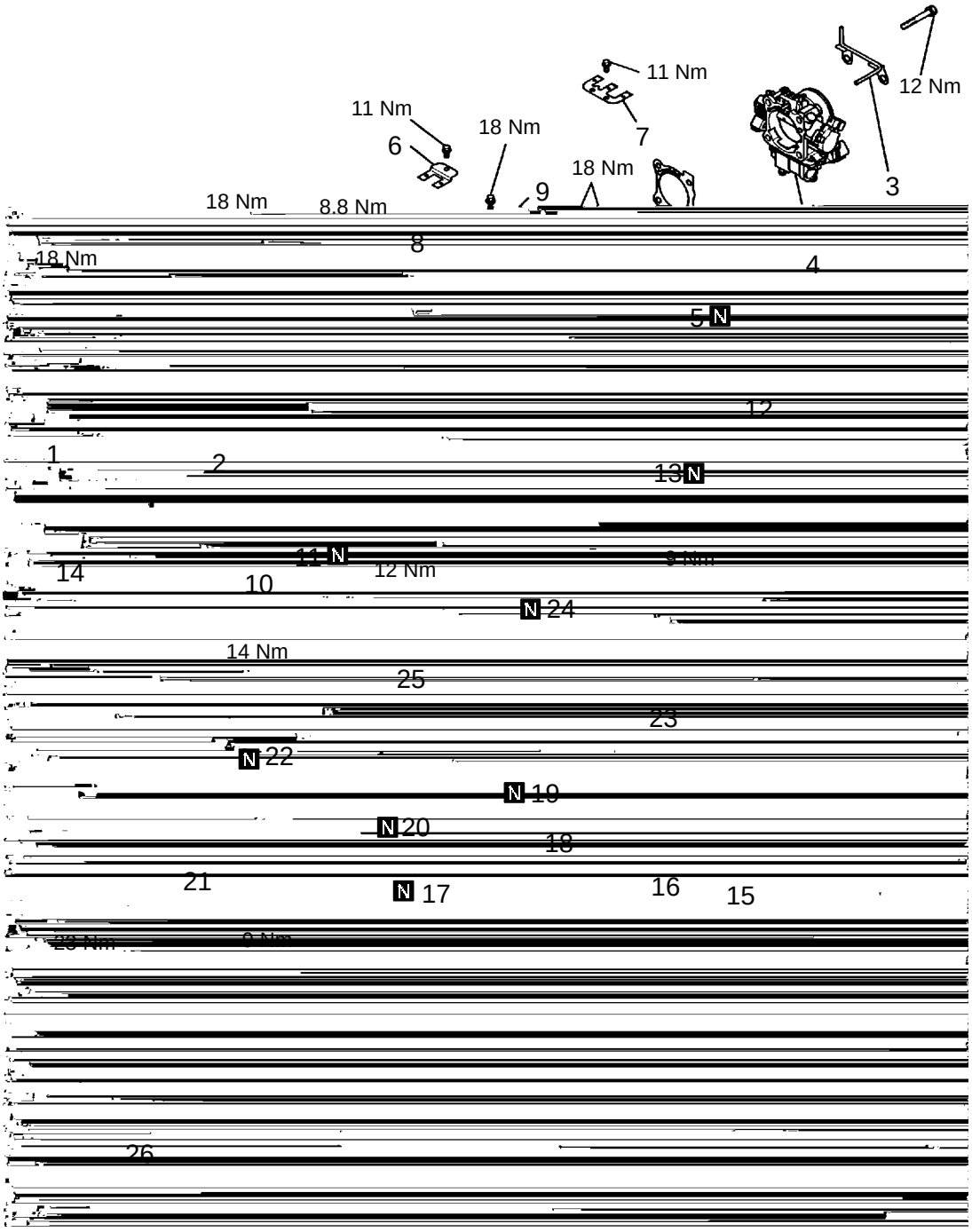

Removal steps

1. Air intake plenum stay, front
2. Air intake plenum stay, rear
3. Vacuum pipe
4. Throttle body
" CA 5. Gasket
6. Connector bracket
7. Connector bracket
8. Accelerator cable bracket
9. Ignition failure sensor
10. Air temperature sensor
11. Gasket
12. Air intake plenum
13. Gasket
14. Control harness
15. Delivery pipe and injector
16. Insulator
17. Insulator
" BA 18. Injector
19. Grommet
20. O-ring
21. Fuel pipe
22. O-ring
" AA 23. Fuel pressure regulator
24. O-ring
25. Delivery pipe
26. Alternator bracket

INSTALLATION SERVICE POINTS

" AA FUEL PRESSURE REGULATOR INSTALLATION

(1) Apply spindle oil or gasoline to the new O-ring installed on the fuel pressure regulator.
(2) Insert the fuel pressure regulator in the delivery pipe.
(3) Make sure that the fuel pressure regulator turns smoothly;

6. IGNITION SYSTEM

REMOVAL AND INSTALLATION <SOHC>

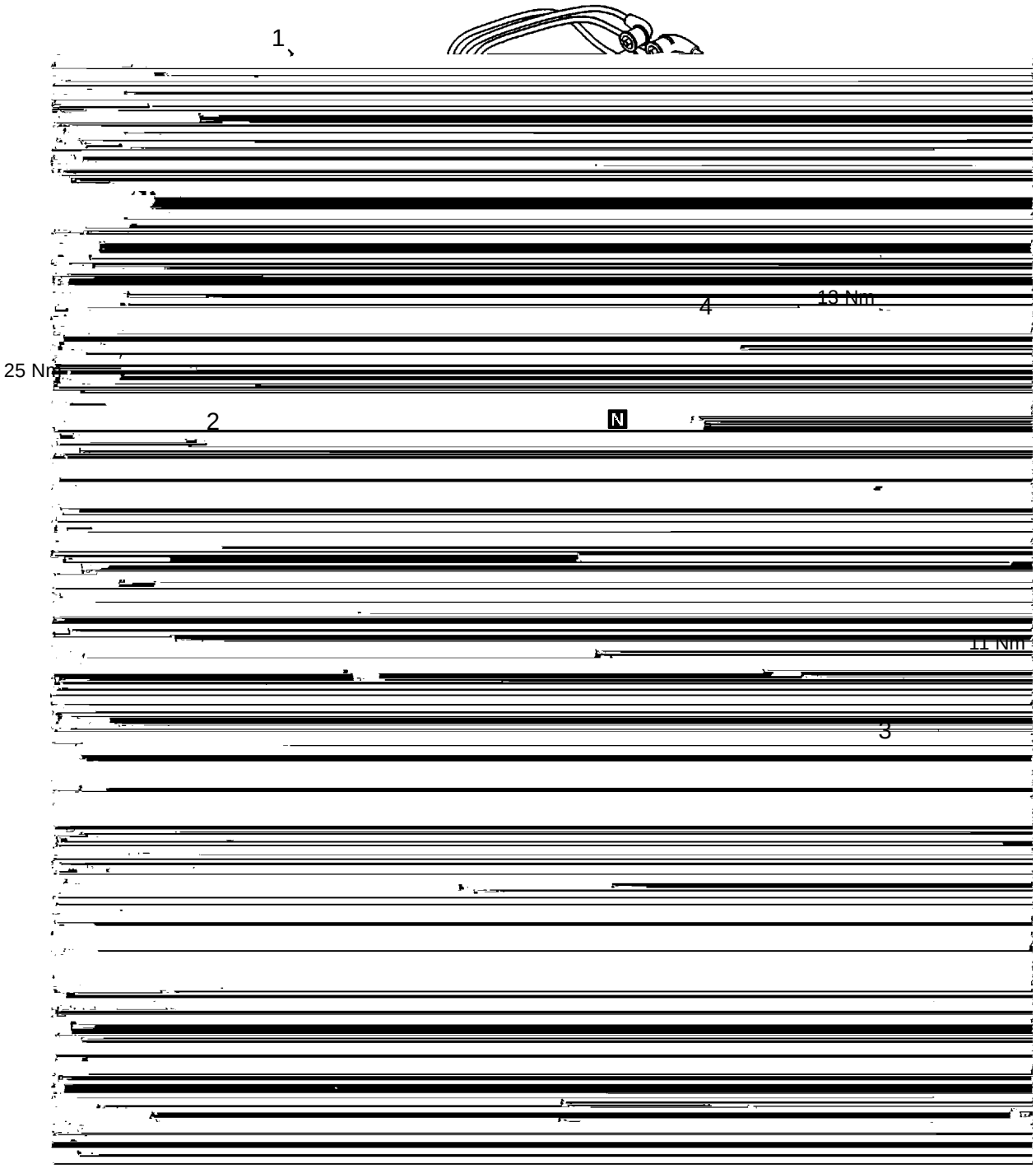

Removal steps

1. Spark plug cable
2. Spark plug
3. Water cover
4. Distributor

" AA

REMOVAL AND INSTALLATION <MIVEC>

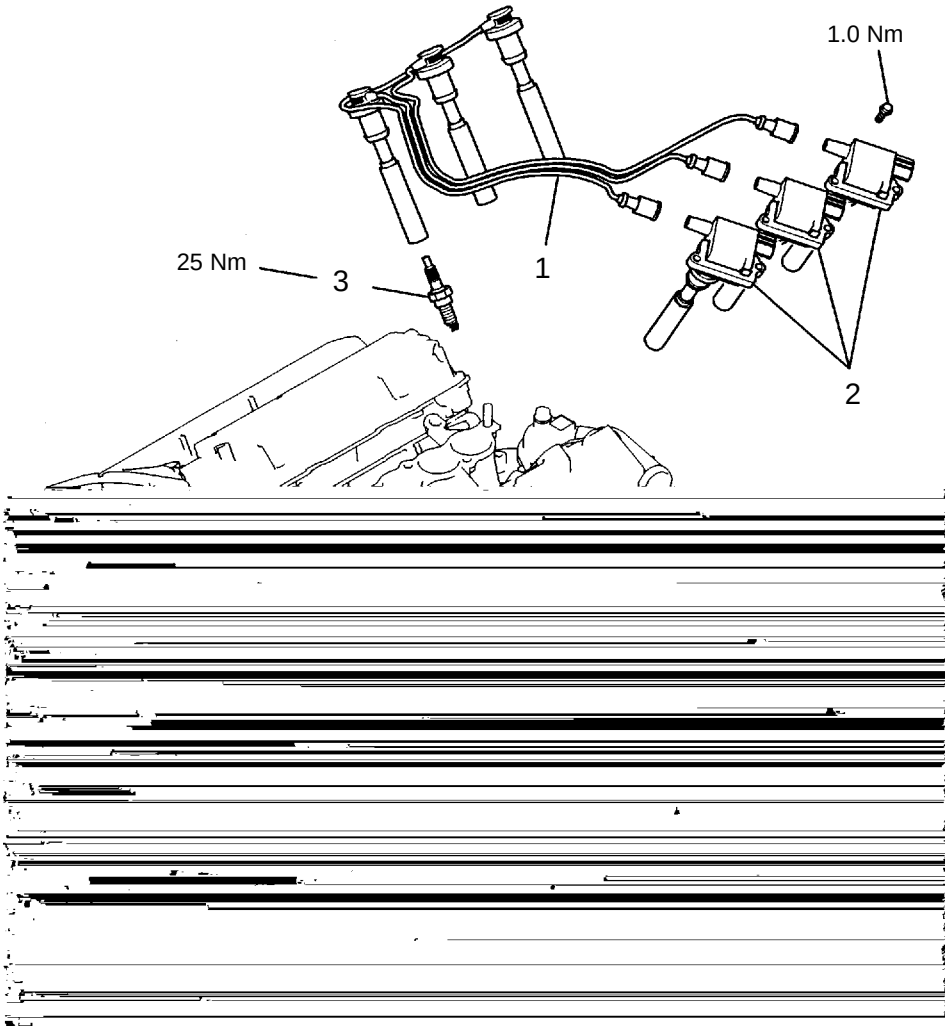

Removal steps

1. Spark plug cable
2. Ignition coil
3. Spark plug

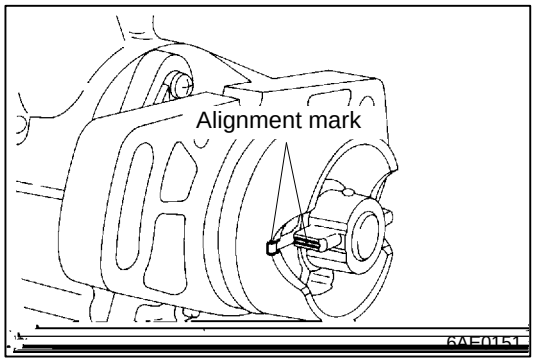

INSTALLATION SERVICE POINT

" AA DISTRIBUTOR INSTALLATION

(1) Turn the crankshaft clockwise to bring the No. 1 cylinder piston to the compression stroke top dead center.
(2) Align the mark on the distributor housing with the mark on the coupling.
(3) Install the distributor while aligning the coupling key with the keyway in the camshaft end.

7. WATER PUMP AND WATER PIPE

REMOVAL AND INSTALLATION <SOHC>

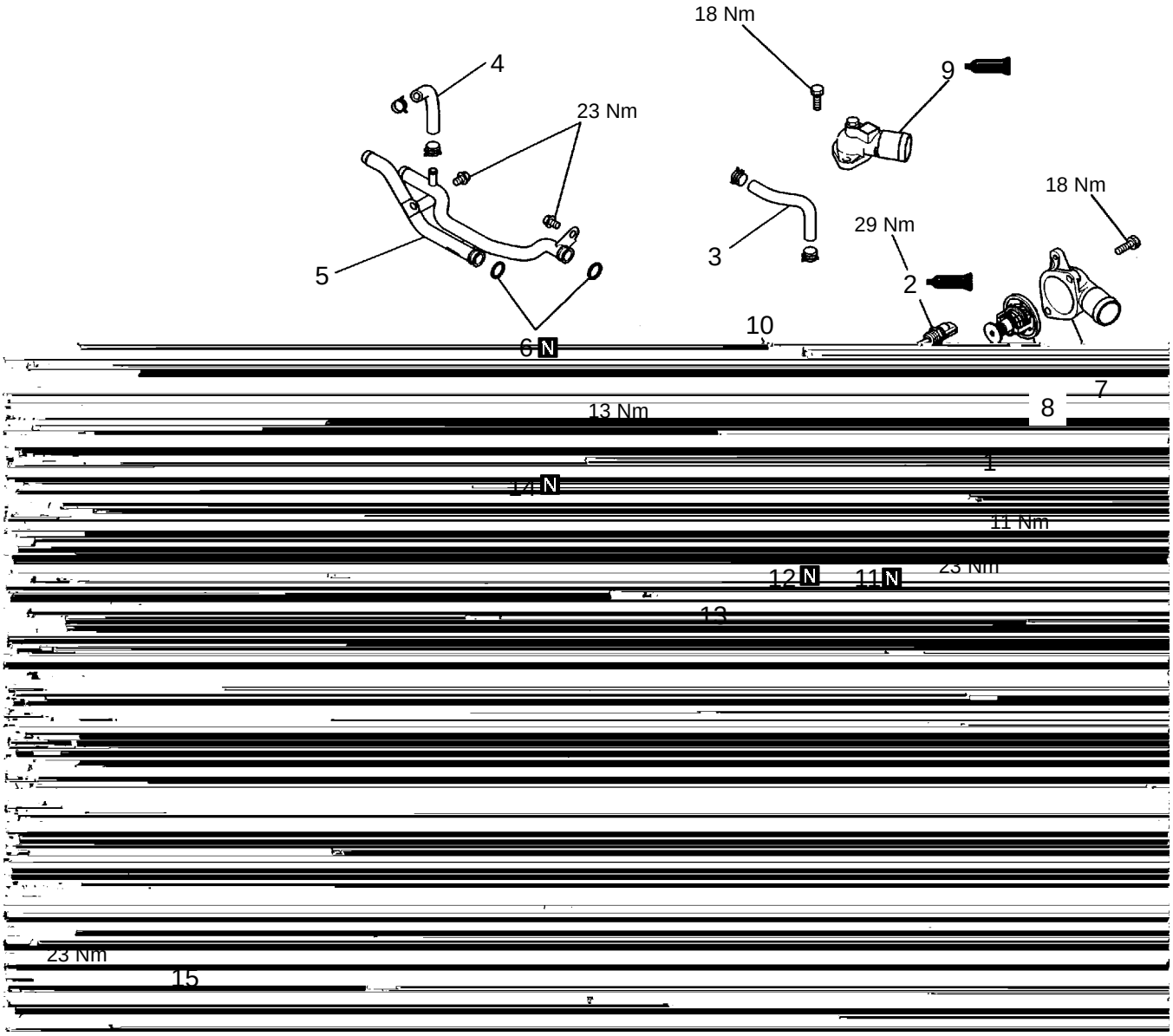

Removal steps

" FA 1. Engine coolant temperature gauge unit
" EA 2. Engine coolant temperature sensor
3. Water hose
4. Water hose
5. Heater pipe
6. O-ring
7. Water inlet fitting
" DA 8. Thermostat
" CA 9. Water outlet fitting
10. Thermostat housing
11. Gasket
" BA 12. O-ring
" BA 13. Water pipe
" BA 14. O-ring
" AA 15. Water pump

REMOVAL AND INSTALLATION <MIVEC>

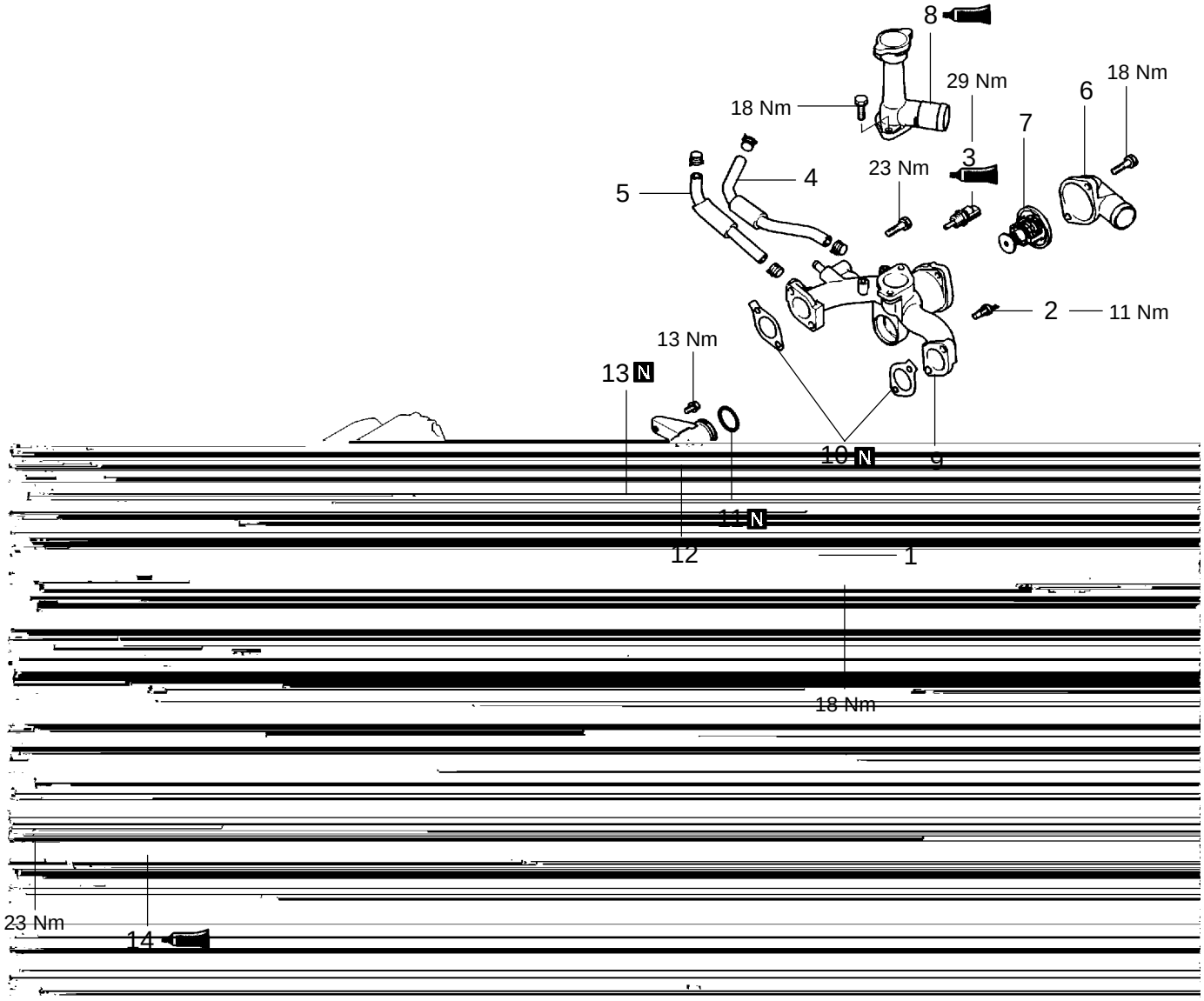

Removal steps

1. Engine hanger
" FA 2. Engine coolant temperature gauge unit
" EA 3. Engine coolant temperature sensor
4. Water hose
5. Water hose
6. Water inlet fitting
" DA 7. Thermostat
" CA 8. Water outlet fitting
9. Thermostat housing
10. Gasket
" BA 11. O-ring
" BA 12. Water pipe
" BA 13. O-ring
" AA 14. Water pump

9. ROCKER ARM AND CAMSHAFT <SOHC>

REMOVAL AND INSTALLATION

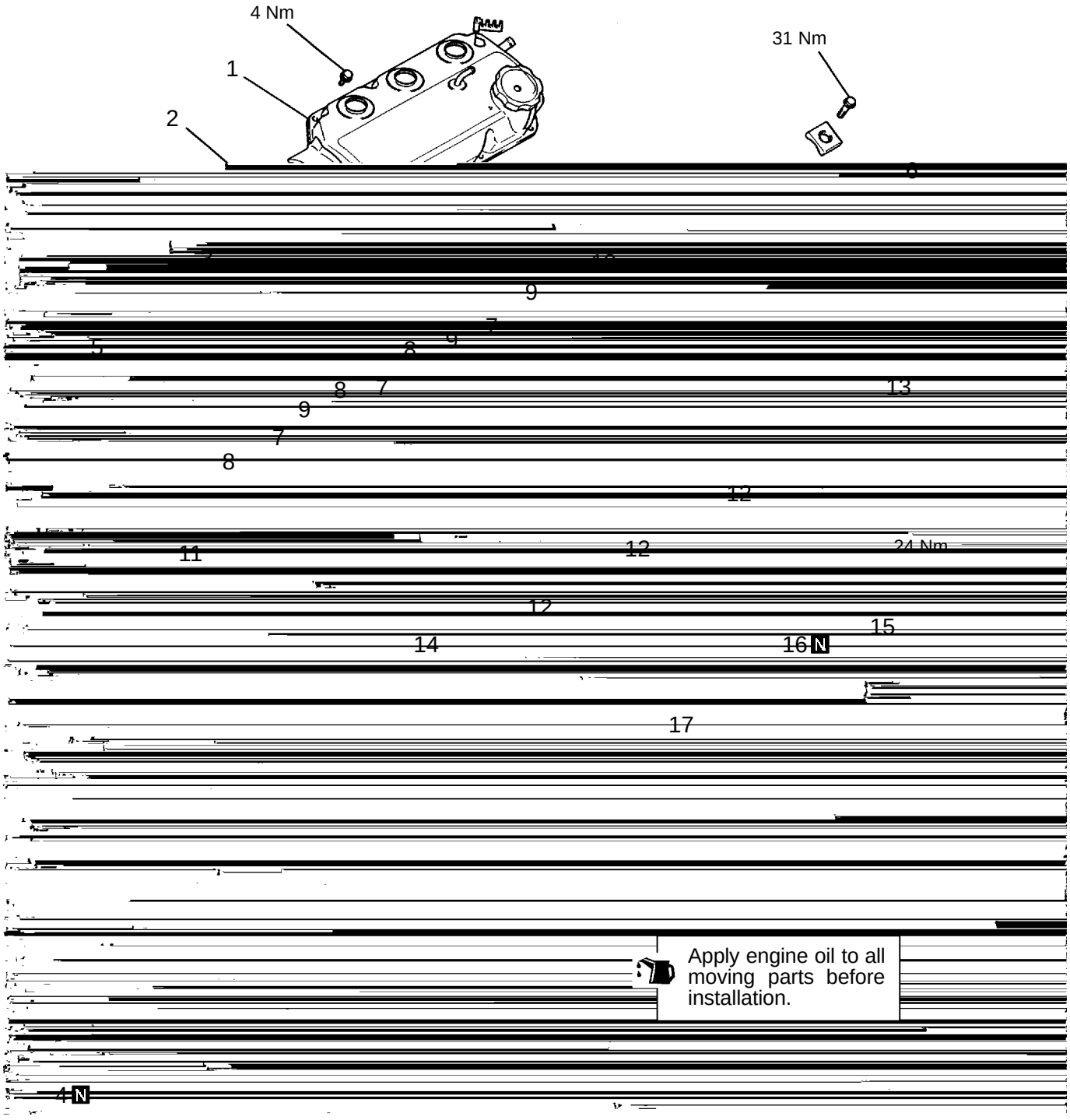

Removal steps

1. Rocker cover
2. Rocker cover gasket
3. Oil seal
4. ▶D◀ Oil seal
5. ◀A▶ ▶C◀ Rocker arm and rocker shaft
6. ◀A▶ ▶C◀ Rocker arm and rocker shaft
7. ▶C◀ Rocker shaft spring
8. Rocker arm A
9. Rocker arm B
10. Rocker arm shaft
11. ▶B◀ Lash adjuster
12. Rocker arm C
13. Rocker arm shaft
14. ▶B◀ Lash adjuster
15. Thrust case
16. O-ring
17. ▶A◀ Camshaft

REMOVAL SERVICE POINT

◀A▶ ROCKER ARMS AND ROCKER ARM SHAFTS REMOVAL

(1) Before removing rocker arms and shafts assembly, install the special tool as illustrated to prevent adjuster from dropping.

INSTALLATION SERVICE POINTS

▶A◀ CAMSHAFT INSTALLATION

(1) Apply engine oil to journals and cams of the camshaft before installation.
Be sure to install the correct camshafts on the correct bank.
Do not confuse the intake camshaft with the exhaust one.

▶B◀ LASH ADJUSTER INSTALLATION

(1) Immerse the lash adjuster in clean diesel fuel.
(2) Using the special tool (air bleed wire), move the plunger up and down 4 or 5 times while pushing down lightly on the check ball in order to bleed out the air.

(3) Insert the lash adjuster to rocker arm,arm,9666ste1ar12.960012.9

NOTE
Install the rocker shaft spring before installing the exhaust side rocker arms and rocker arm shaft.

(3) Remove the special tool for securing the lash adjuster.
(4) Make sure that the notch in the rocker arm shaft is in the direction as illustrated.

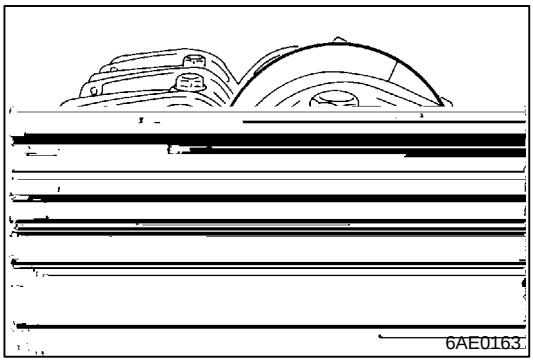

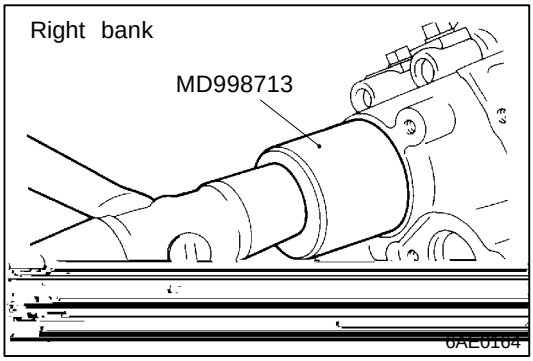

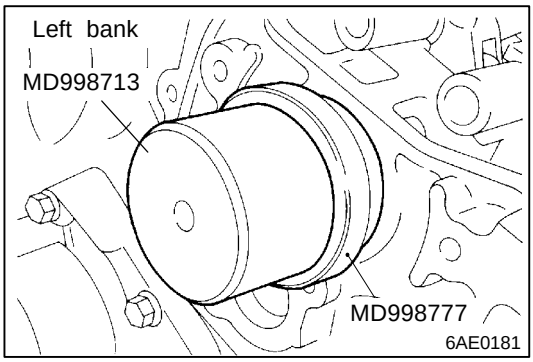

▶D◀ CAMSHAFT OIL SEAL INSTALLATION

(1) When installing the left bank camshaft oil seal, use the special tool to prevent interference with the knock pin.

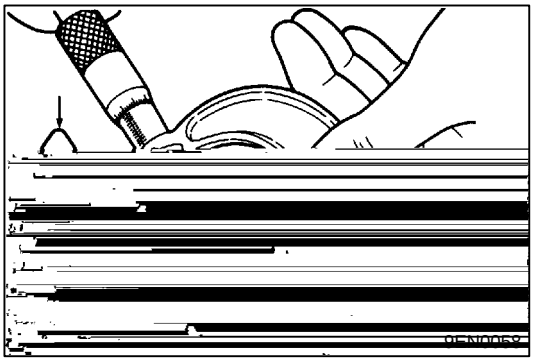

INSPECTION

CAMSHAFT

(1) Measure the cam height (lobe diameter) and, if the limit is exceeded, replace the camshaft.

Standard value:
35.20 mm ..... Intake side
34.91 mm ..... Exhaust side

Limit:
34.70 mm ..... Intake side
34.41 mm ..... Exhaust side

LASH ADJUSTER LEAK DOWN TEST

Caution
- The lash adjuster is a precision part. Keep it free from dust and other foreign matters.
- Do not disassemble lash adjuster.
- When cleaning lash adjuster, use clean diesel fuel only.

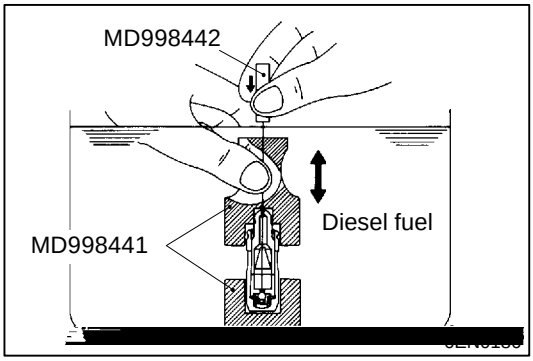

(1) Immerse the lash adjuster in clean diesel fuel.
(2) While lightly pushing down inner steel ball using the special tool (Air bleed wire MD998442), move the plunger up and down four or five times to bleed air.
Use of the special tool (Retainer MD998441) helps facilitate the air bleeding of the rocker arm mounted type lash adjuster.
(3) Remove the special tool (Air bleed wire MD998442) and press the plunger. If the plunger is hard to be pushed in, the lash adjuster is normal. If the plunger can be pushed in all the way readily, bleed the lash adjuster again and test again.
If the plunger is still loose, replace the lash adjuster.

Caution
- Upon completion of air bleeding, hold lash adjuster upright to prevent inside diesel fuel from spilling.

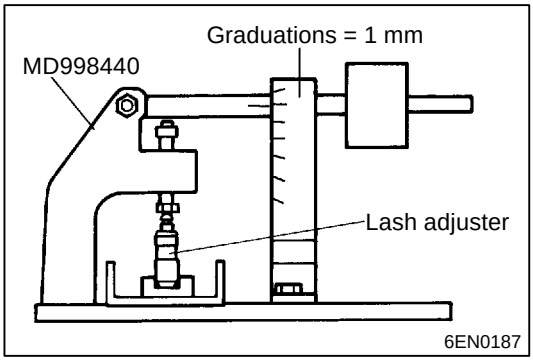

(4) After air bleeding, set lash adjuster on the special tool (Leak down tester MD998440).
(5) After plunger has gone down somewhat [0.2 - 0.5 mm], measure time taken for it to go down 1 mm. Replace if measured time is out of specification.

Standard value: 4 - 20 seconds/1 mm
(Diesel fuel at 15 - 20 °C)

10. ROCKER COVER AND CAMSHAFT <MIVEC>

REMOVAL AND INSTALLATION

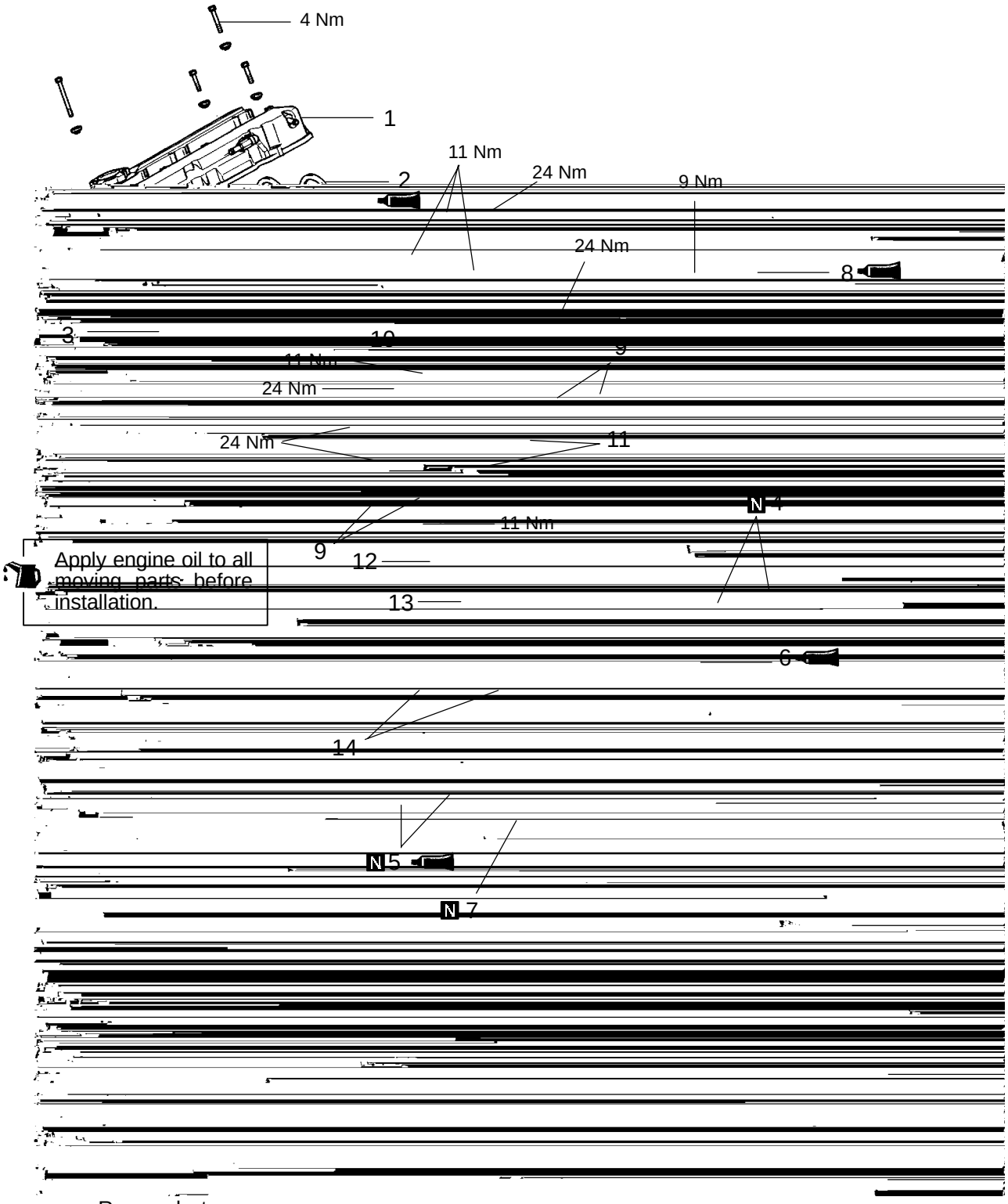

Removal steps

- ▶G◀ 1. Rocker cover
- 2. Rocker cover gasket
- 3. Oil seal
- ▶F◀ 4. Circuit packing
- ▶E◀ 5. Oil seal
- ▶D◀ 6. Camshaft holder
- ▶D◀ 7. Semi-circular packing
- ▶C◀ 8. Oil control valve
- ▶B◀ 9. Cam cap
- 10. Oil control valve holder
- ▶B◀ 11. Camshaft bearing cap
- 12. Arm spring holder
- 13. Arm spring
- ▶A◀ 14. Camshaft

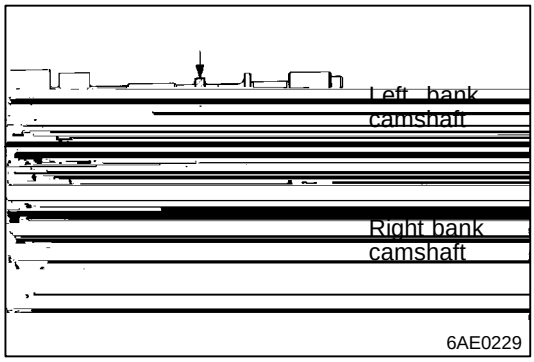

INSTALLATION SERVICE POINT

▶A◀ CAMSHAFT INSTALLATION

(1) Intake valve camshaft and exhaust valve camshaft can be identified by their diameters at the portions indicated in the illustration.

Intake valve camshaft: 25 mm
Exhaust valve camshaft: 30 mm

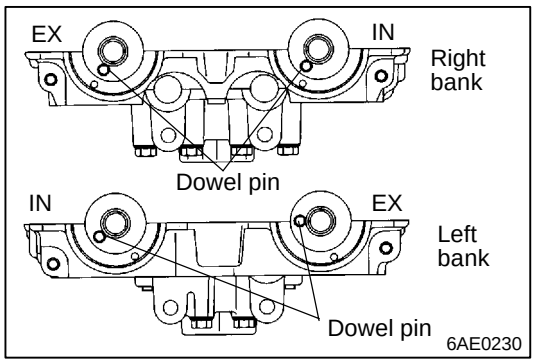

(2) Before installing each camshaft, apply engine oil to its journals and cams.
(3) The camshaft dowel pins must be positioned as shown in the illustration.

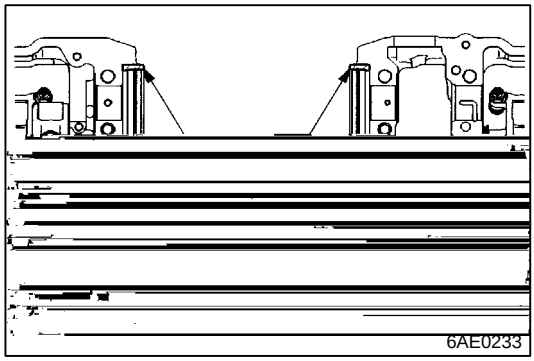

▶B◀ CAMSHAFT BEARING CAP / CAM CAP INSTALLATION

(1) Apply sealant to the illustrated points of the camshaft holders.

Specified sealant:
3M ATD part No. 8660 or equivalent

(2) Install the bearing caps and cam caps correctly according to the “I” (intake) and “E” (exhaust) marks as well as the stamped cap numbers and front marks.
(3) Tighten the bolts in the sequence of the numbers shown in the illustration.

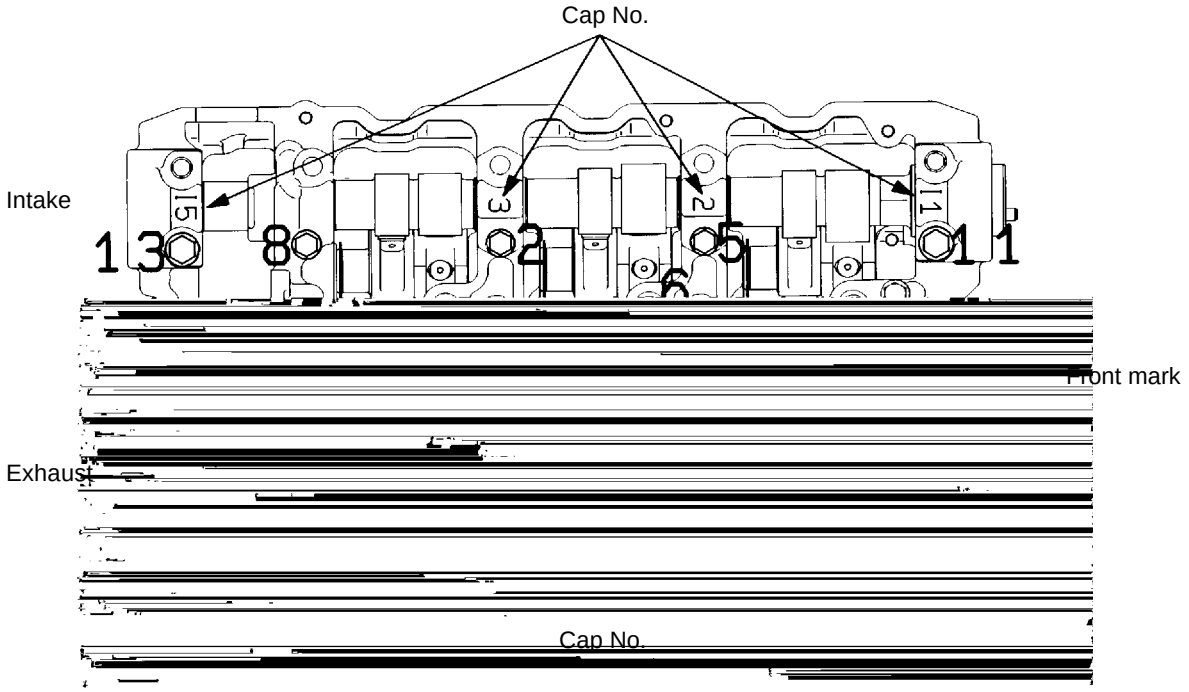

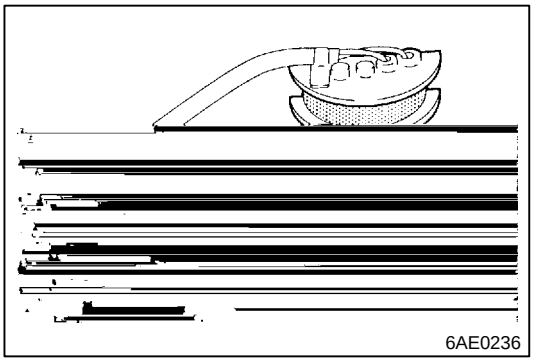

▶C◀ OIL CONTROL VALVE INSTALLATION

(1) Apply the specified sealant to the area shown.

Specified sealant:
3M ATD Part No. 8660 or equivalent

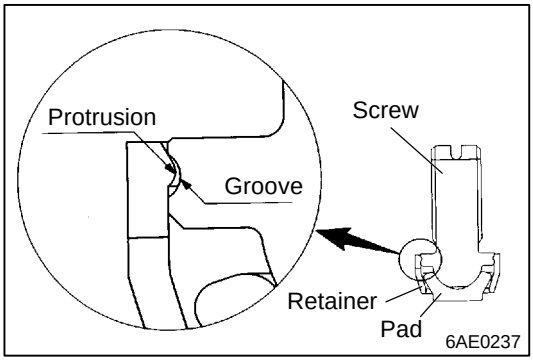

▶D◀ SEMI-CIRCULAR PACKING / CAMSHAFT HOLDER INSTALLATION

(1) Make sure that the retainer of each adjusting screw is fitted correctly.

Caution
- If the protrusion on the retainer is not correctly fitted in the groove of the screw, the pad could slip off the retainer.

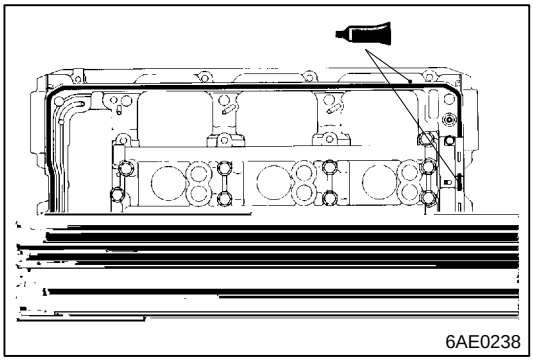

(2) Apply 3 mm thick bead of foam-in-place gasket (FIPG) to the gasket surface of the camshaft holder.

Caution
- Since the FIPG could cause blocking of engine oil passages, be careful not to apply FIPG to other locations than specified.

Specified sealant:
Mitsubishi Genuine Part No. MD970389 or equivalent

(3) Install the semi-circular packings.
(4) Raise the rocker arms until the rollers come into contact with the cams, and install the camshaft holder.

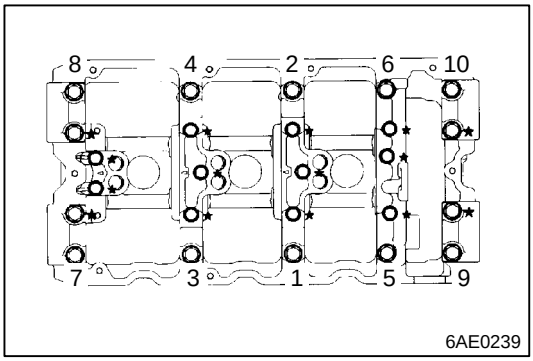

(5) Tighten the bolts in the order indicated in the illustration.
(6) Check the torque of the ★-marked bolts. See section ▶B◀ for the checking order.
(7) Verify that the pad of each adjusting screw is in place.

▶E◀ CAMSHAFT OIL SEAL INSTALLATION

(1) When installing the left bank camshaft oil seal, use the special tool to prevent interference with the knock pin.

▶F◀ CIRCULAR PACKING INSTALLATION

▶G◀ROCKER COVER INSTALLATION

(1) Apply the specified sealant to the area shown.

Specified sealant:
3M ATD Part No. 8660 or equivalent

INSPECTION

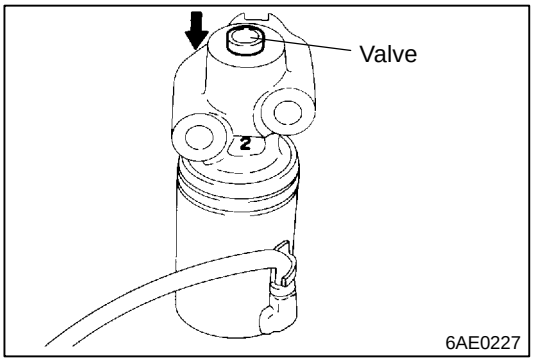

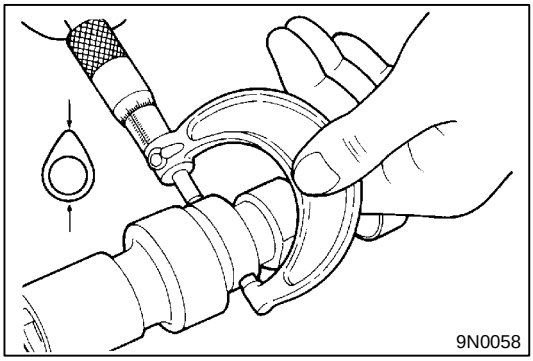

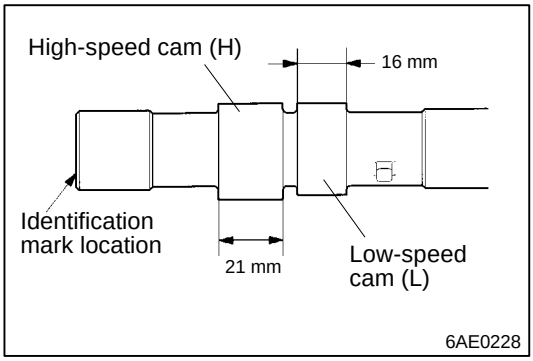

CAMSHAFT

(1) Measure the cam heights. If the specified limit is exceeded, replace the camshaft.

NOTE
Each camshaft has an identification mark on its rear end surface.

( ): Identification mark		Standard value	Limit
IN (3)	L	34.34 mm	33.84 mm
	H	36.46 mm	35.96 mm
EX (C)	L	34.40 mm	33.90 mm
	H	35.86 mm	35.36 mm

VALVE CLEARANCE ADJUSTMENT

NOTE
Adjust the valve clearance for each cylinder and for both intake and exhaust valves with the piston at the compression stroke top dead center.

(1) Bring the No. 1 cylinder piston into the compression stroke top dead center.

(2) Use the special tool to loosen the adjusting screw.
(3) Insert a thickness gauge of the thickness specified below between the low-speed cam (narrow cam) and roller.

Intake ..... 0.10 mm
Exhaust ..... 0.13 mm

(4) Screw in one of the two adjusting screws until it comes into contact with the valve (when the turning torque changes).

6AE0285

(5) Screw in the other adjusting screw until it comes into contact with the valve (when the turning torque changes), and then tighten the lock nut.
(6) Loosen the adjusting screw that was screwed in first slightly (until the turning torque becomes almost zero). Screw in the adjusting screw until it comes into contact with the valve again (when the turning torque changes) and tighten the lock nut.
(7) Remove the thickness gauge.

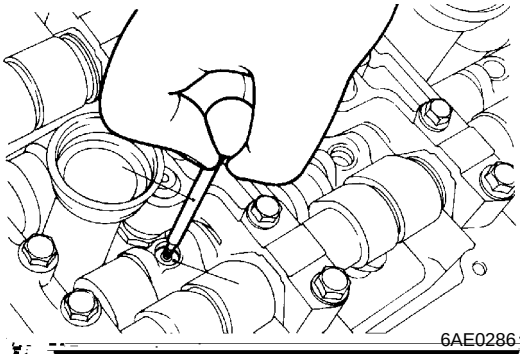

(8) Screw the special tool into the top of piston of the rocker arm “H”, and pull up the tool to make sure that the piston can be lifted smoothly by hand.
(9) Perform valve clearance adjustments for other cylinders by turning every time the crankshaft through 120° (60° in camshaft sprocket angle) and following the above steps (2) through (8). Perform the adjustments in the following order of cylinder number:
No. 2 → No. 3 → No. 4 → No. 5 → No. 6

11. ROCKER ARM AND ROCKER SHAFT CAP <MIVEC>

REMOVAL AND INSTALLATION

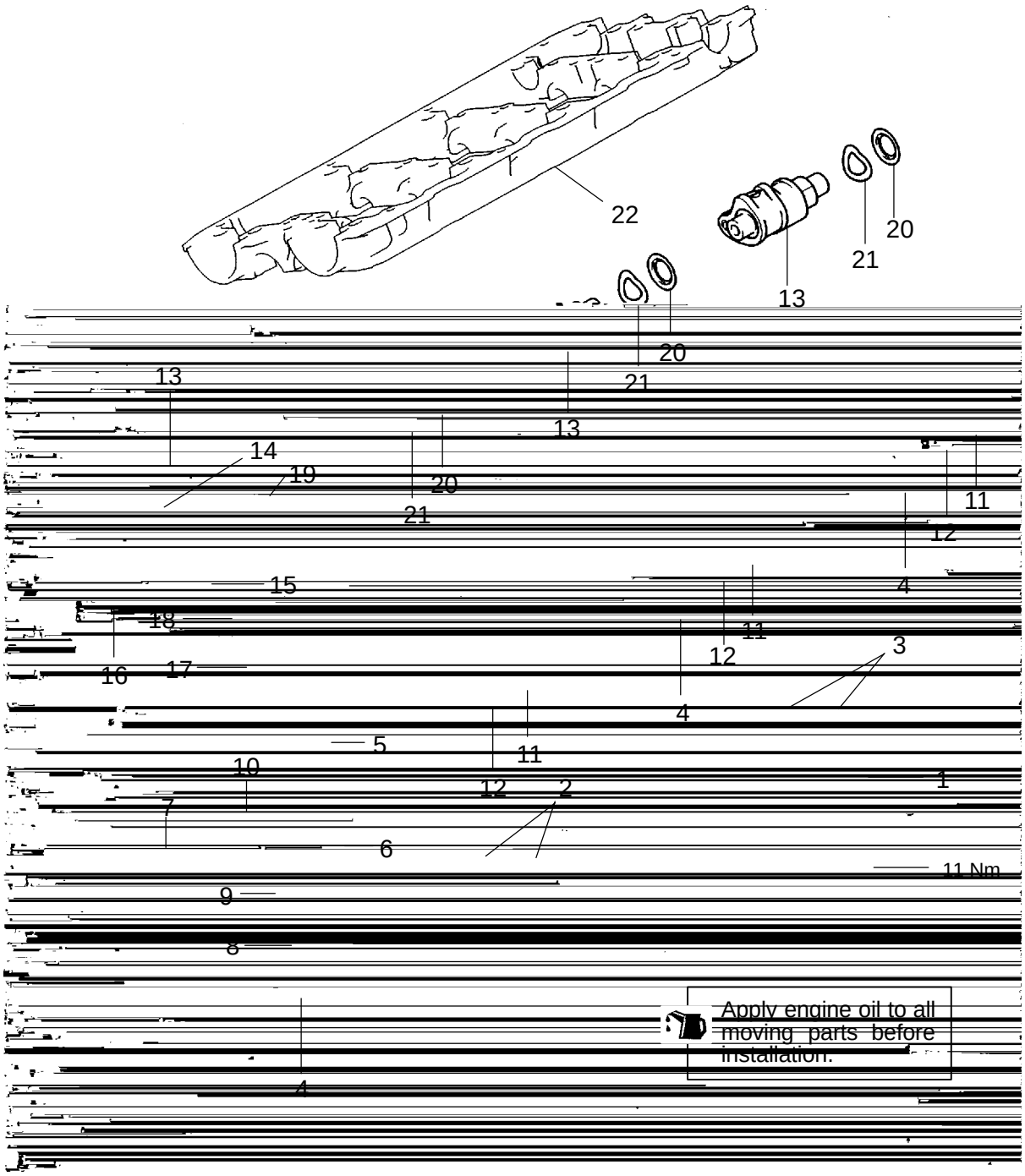

Removal steps

" B A 1. Rocker shaft cap
2. Seal cap A
3. Seal cap C
4. Intake rocker arm assembly A
5. Nut
6. Adjusting screw
7. Intake rocker arm H
8. Piston H
9. Piston spring H
10. Intake T-lever
" A A 11. Spring guide
12. Wave washer
13. Exhaust rocker arm assembly A
14. Nut
15. Adjusting screw
16. Exhaust rocker arm H
17. Piston H
18. Piston spring H
19. Exhaust T-lever L
" A A 20. Spring guide
21. Wave washer
22. Camshaft holder

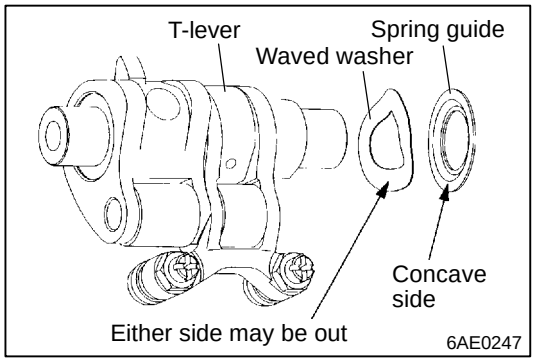

INSTALLATION SERVICE POINTS

" A A SPRING GUIDE INSTALLATION

(1) Install the spring guide with the concave side toward the rocker arm. The waved washer may be installed with either side out.

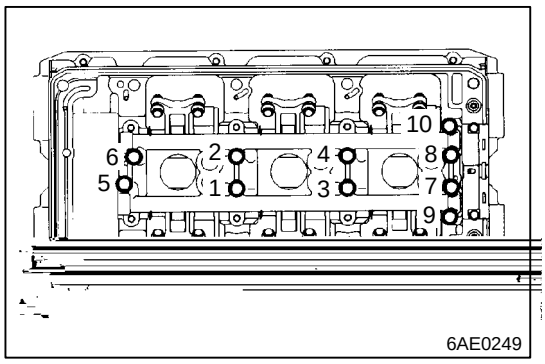

" B A ROCKER SHAFT CAP INSTALLATION

(1) Tighten the bolts in the sequence shown.
(2) Make sure that each rocker arm moves smoothly.

12. CYLINDER HEAD AND VALVES

REMOVAL AND INSTALLATION <SOHC>

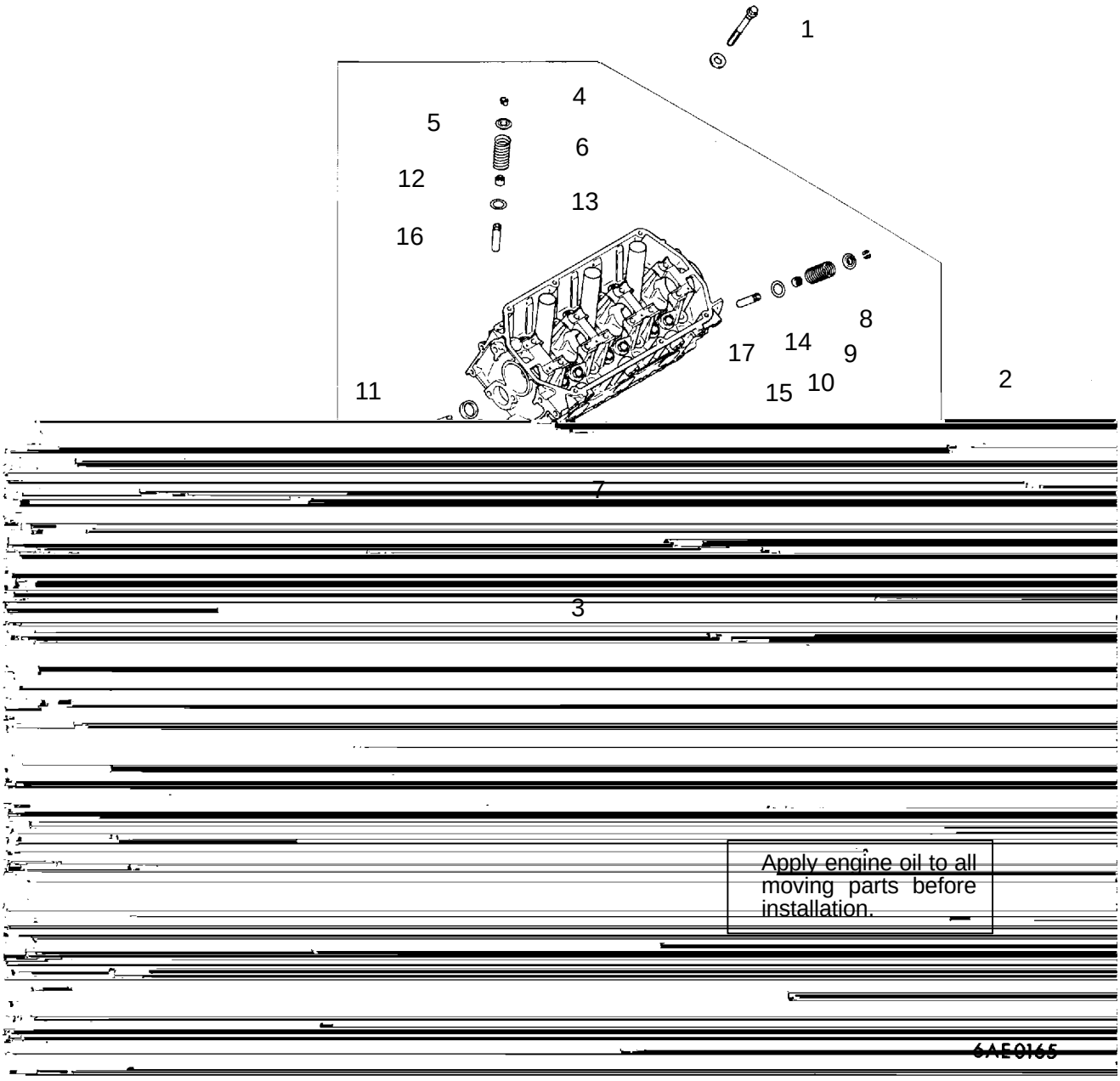

REMOVAL AND INSTALLATION <MIVEC>

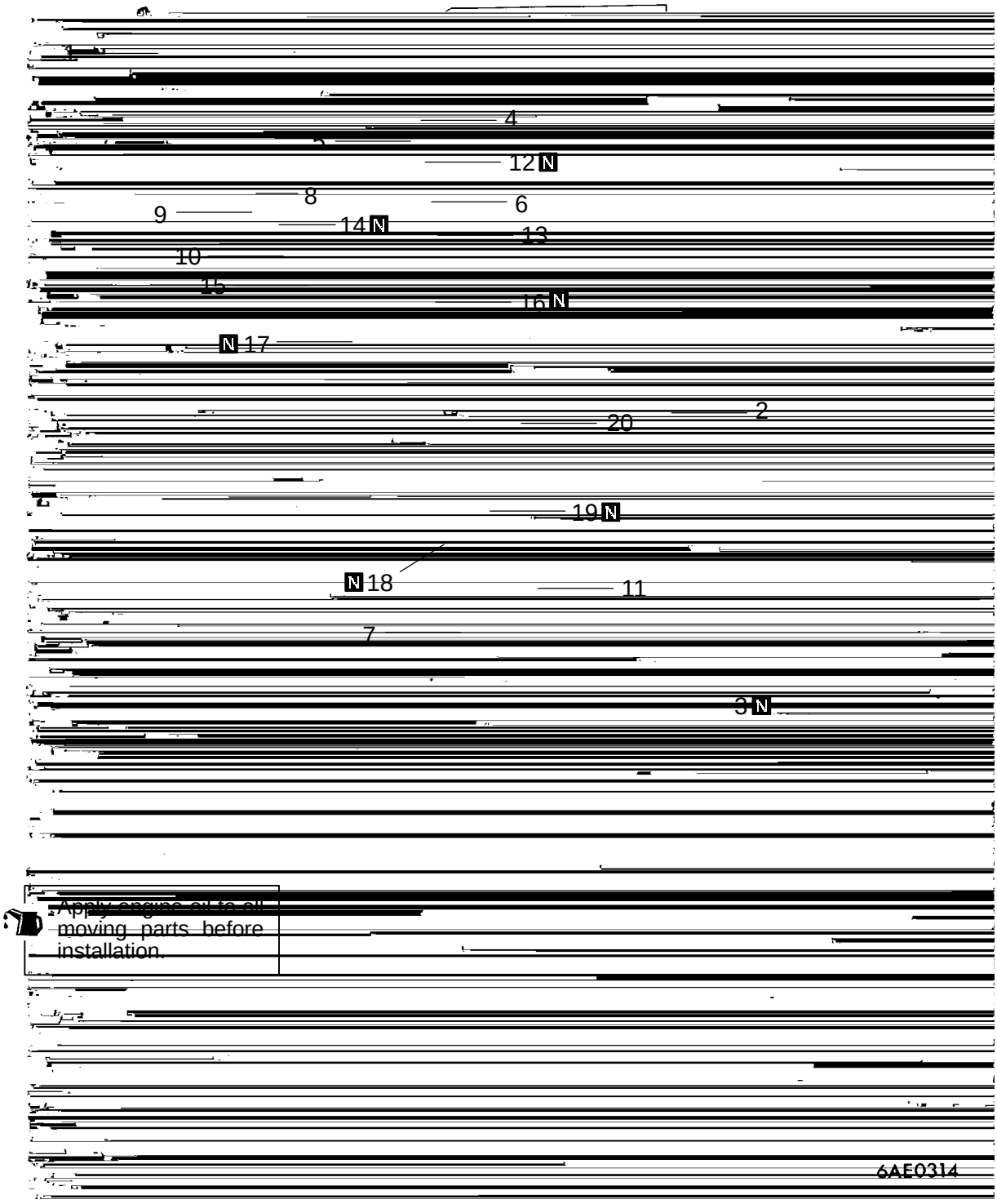

Removal steps

◀A▶ ▶D◀ 1. Cylinder head bolt
2. Cylinder head
3. Cylinder head gasket
◀B▶ ▶C◀ 4. Retainer lock
5. Valve spring retainer
▶B◀ 6. Valve spring
7. Intake valve
◀B▶ ▶C◀ 8. Retainer lock
9. Valve spring retainer
▶B◀ 10. Valve spring
◀D▶ 11. Exhaust valve
◀C▶ ▶A◀ 12. Valve stem seal
13. Valve spring seat
◀C▶ ▶A◀ 14. Valve stem seal
15. Valve spring seat
16. Intake valve guide
17. Exhaust valve guide
18. Intake valve seat
19. Exhaust valve seat
20. Cylinder head

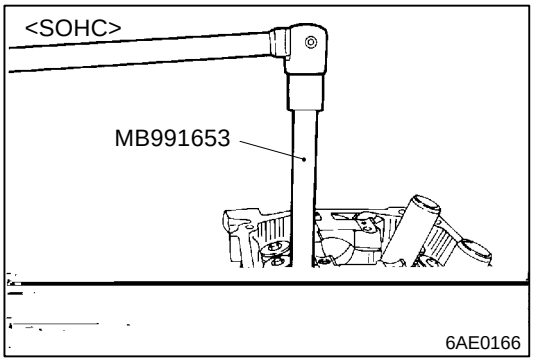

REMOVAL SERVICE POINTS

PRECAUTION FOR REMOVED PARTS

Keep removed parts in order according to the cylinder number and intake/exhaust side.

◀A▶ CYLINDER HEAD BOLT REMOVAL

(1) Using the special tool, loosen the cylinder head bolts. Loosen evenly, little by little.

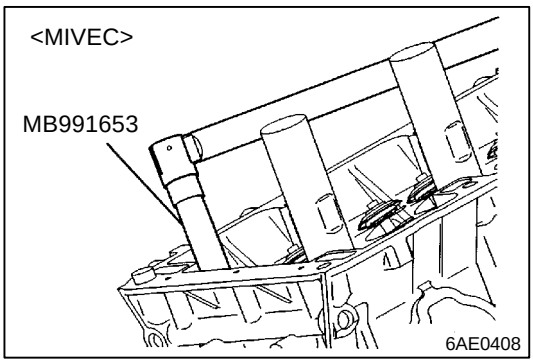

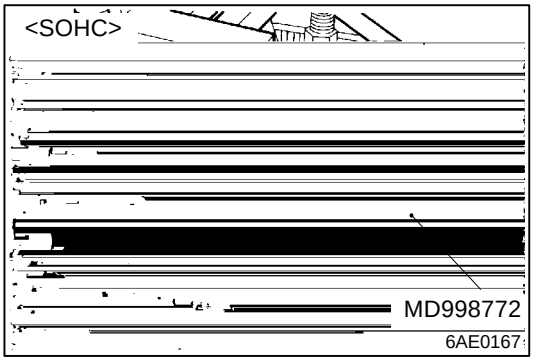

◀B▶ RETAINER LOCK REMOVAL

(1) Store removed valves, springs and other parts, tagged to indicate their cylinder Nos. and location for reassembly.

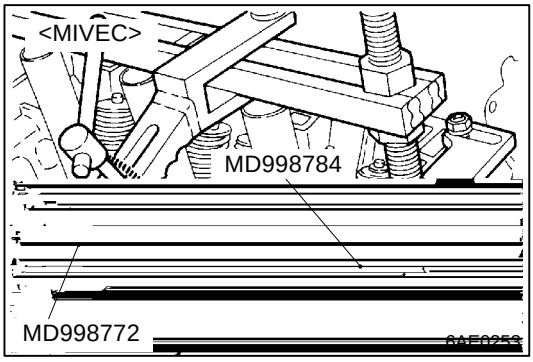

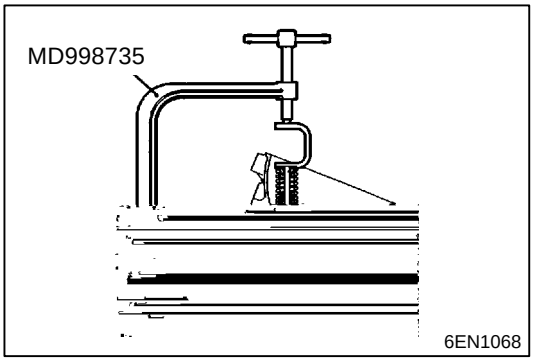

◀C▶ VALVE STEM SEAL REMOVAL

(1) Do not reuse removed valve stem seals.

◀D▶ VALVE HANDLING PRECAUTIONS

(1) Sodium reacts violently with water or moisture generation heat and liberating hydrogen. It must be handled with utmost care because otherwise the following dangerous conditions may result:
Loss of eyesight if sodium gets in eyes.
Burns if sodium contact skin.
Fire hazard.

(2) Handling of Sodium-filled Exhaust Valves
Sodium-filled exhaust valves are not dangerous and may be handled in the same way as ordinary valves unless they are broken.
Never try to break the valves and expose sodium to the air. When worn exhaust valves are to be discarded, have them disposed of by a salvage company equipped with special disposal system, notifying them that the valves contain sodium.
Should the exhaust valves be broken, neutralize sodium using the method described below, and discard the valves in the same way as ordinary valves.

(3) How to Neutralize Sodium
Place a container filled with more than 10 liters of water in a well ventilated large space.

6AE0083

INSPECTION

CYLINDER HEAD

(1) Check the cylinder head gasket surface for flatness by using a straightedge and thickness gauge.

Standard value: 0.03 mm
Limit: 0.2 mm

(2) If the service limit is exceeded, correct to meet the specification.

Grinding limit: *0.2 mm

*Includes/combined with cylinder block grinding

Cylinder head height (Specification when new):
119.9 - 120.1 mm <SOHC>
119.6 - 119.8 mm <MIVEC>

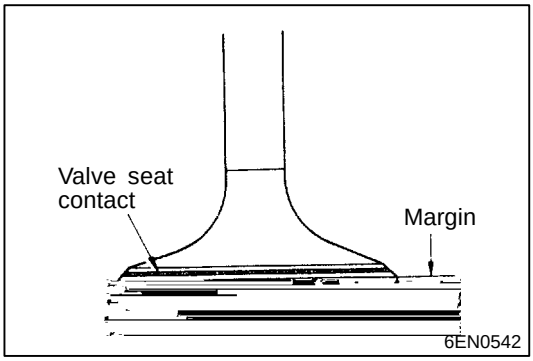

VALVE

(1) Check the valve face for correct contact. If incorrect, reface using a valve refacer. Valve should make a uniform contact with the seat at the centre of valve face.

(2) If the margin is smaller than the service limit, replace the valve.

	Standard value mm	Limit mm
Intake	1.0	0.5
Exhaust	1.3	0.8

(3) Measure the overall height of the valve. If the specified limit is exceeded, replace the valve.

		Standard value mm	Limit mm
Intake	SOHC	113.02	112.52
	MIVEC	112.37	111.87
Exhaust	SOHC	115.32	114.82
	MIVEC	110.74	110.74

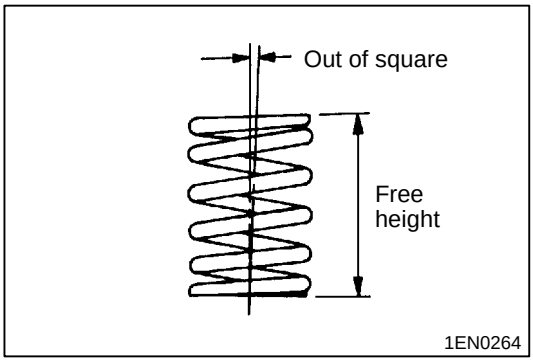

VALVE SPRING

(1) Measure the valve spring's free height. If the measurement is less than specified, replace the spring.

	Standard value mm	Limit mm
SOHC	49.9	48.9
MIVEC	51.5	50.5

(2) Measure the squareness of the spring. If the measurement exceeds the specified limit, replace the spring.

Standard value: 2 ° or less
Limit: 4 °

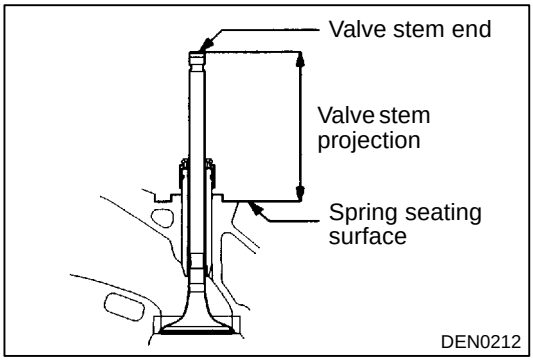

VALVE SEAT

(1) Assemble the valve, then measure the valve stem projection between the end of the valve stem and the spring seating surface. If the measurement exceeds the specified limit, replace the valve seat.

	Standard value mm	Limit mm
SOHC	48.45	48.95
MIVEC	48.40	48.90

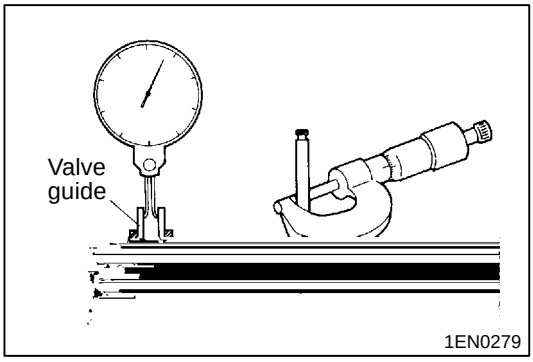

VALVE GUIDE

(1) Measure the clearance between the valve guide and valve stem. If the limit is exceeded, replace the valve guide or valve, or both.

Standard value:
Intake: 0.02 - 0.05 mm
Exhaust: 0.04 - 0.07 mm

Limit:
Intake: 0.10 mm
Exhaust: 0.15 mm

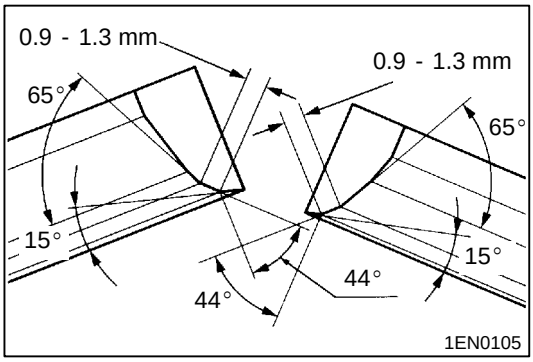

VALVE SEAT RECONDITIONING PROCEDURE

(1) Before correcting the valve seat, check the clearance between the valve guide and valve. If necessary, replace the valve and/or valve guide.
(2) Using the appropriate special tool or seat grinder, correct the valve seat to achieve the specified seat width and angle.
(3) After correcting the valve seat, lap the valve and valve seat using lapping compound. Then, check the valve stem projection (refer to VALVE SEAT in INSPECTION).

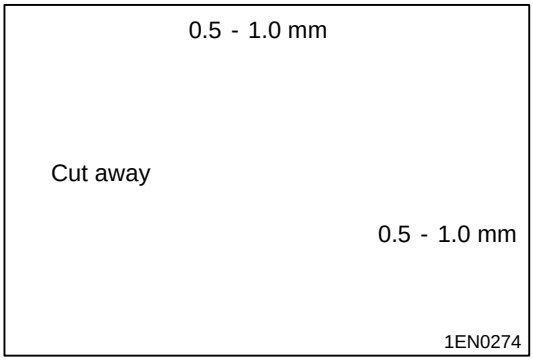

VALVE SEAT REPLACEMENT PROCEDURE

(1) Cut the valve seat to be replaced from the inside to thin the wall thickness. Then, remove the valve seat.
(2) Rebore the valve seat hole in the cylinder head to a selected oversize valve seat diameter.

Intake valve seat hole diameter
0.3 O.S. <SOHC>: 29.80 - 29.82 mm
<MIVEC>: 32.30 - 32.32 mm
0.6 O.S. <SOHC>: 30.10 - 30.12 mm
<MIVEC>: 32.60 - 32.62 mm

Exhaust valve seat hole diameter
0.3 O.S. <SOHC>: 27.80 - 27.82 mm
<MIVEC>: 29.80 - 29.82 mm
0.6 O.S. <SOHC>: 28.10 - 28.12 mm
<MIVEC>: 30.10 - 30.12 mm

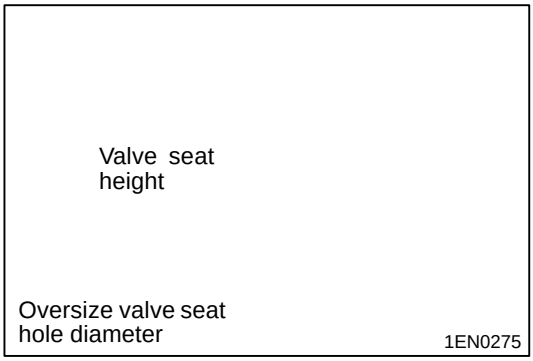

(3) Before fitting the valve seat, either heat the cylinder head up to approximately 250°C or cool the valve seat in liquid nitrogen, to prevent the cylinder head bore from galling.
(4) Correct the valve seat to the specified width and angle.

VALVE GUIDE REPLACEMENT

(1) Force the valve guide out toward the cylinder block using a press.
(2) Machine the valve guide hole in the cylinder head to the size of the oversize valve guide to be installed.

Caution
- Do not use the valve guide of the same size as the removed one.

Valve guide hole diameters in cylinder head
0.05 O.S.: 11.05 - 11.07 mm
0.25 O.S.: 11.25 - 11.27 mm
0.50 O.S.: 11.50 - 11.52 mm

▶D◀ OIL PAN INSTALLATION <SOHC>

(1) Clean the cylinder block and oil pan gasket application surfaces.
(2) Install the oil pan within 15 minutes after FIPG has been applied to the entire flange surfaces of the oil pan.

Specified sealant:
Mitsubishi Genuine Part No. MD970389 or equivalent

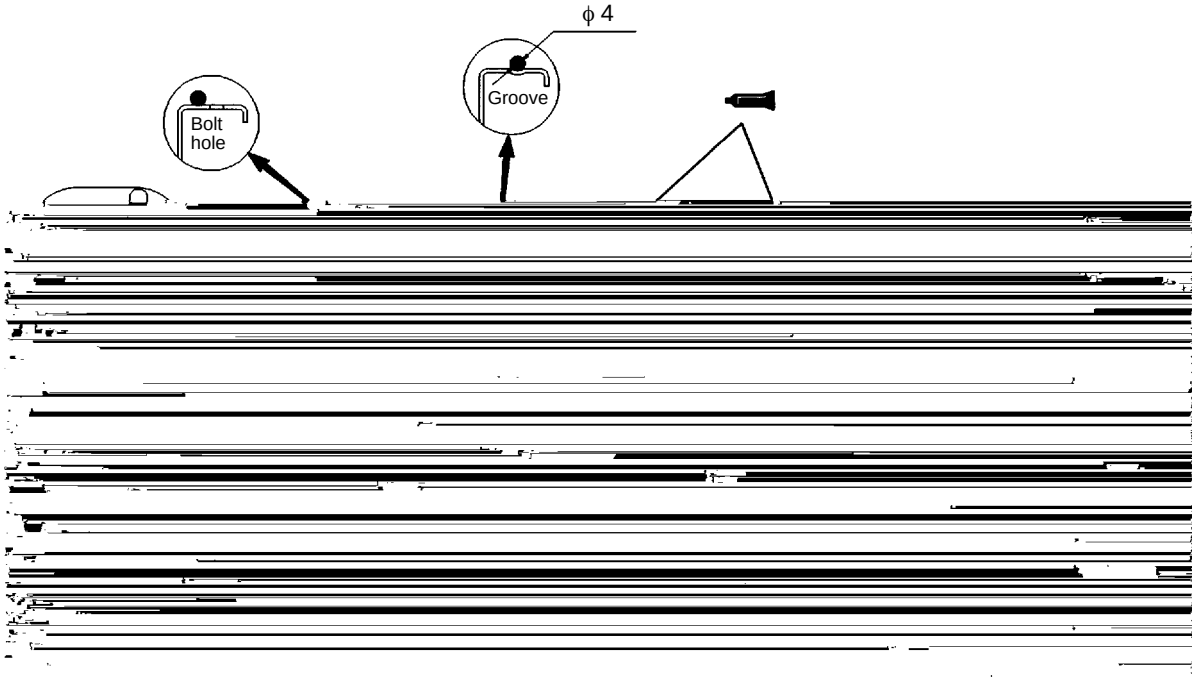

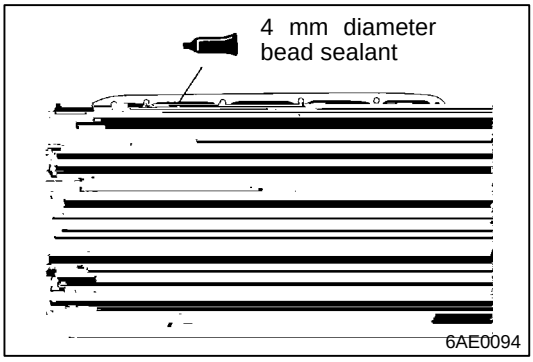

▶E◀ OIL PAN INSTALLATION <MIVEC>

(1) Clean the cylinder block and oil pan gasket application surfaces.
(2) Install the oil pan within 15 minutes after FIPG has been applied to the entire flange surfaces of the oil pan.

Specified sealant:
Mitsubishi Genuine Part No. MD970389 or equivalent

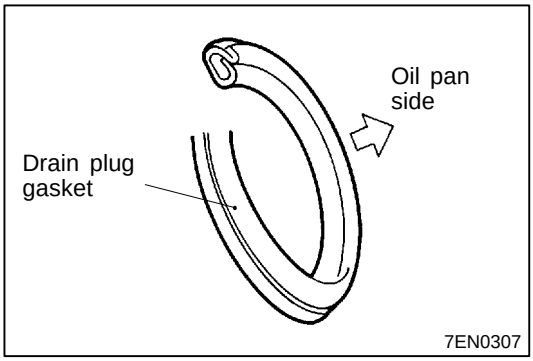

▶F◀ DRAIN PLUG GASKET INSTALLATION

(1) Install the drain plug gasket in the shown direction.

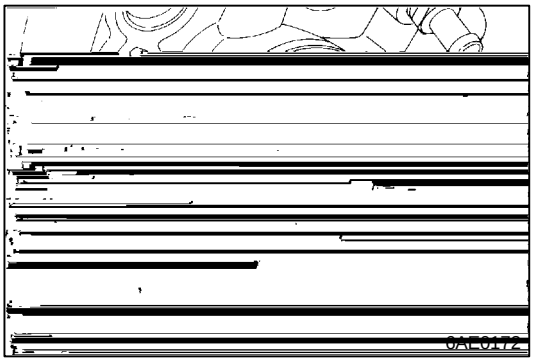

▶G◀OIL COOLER INSTALLATION

(1) Install the oil cooler, with the oil cooler's positioning projection positioned against the rib on cylinder block.

▶H◀ OIL FILTER INSTALLATION

(1) Clean the surfaces of the cylinder block on which the oil filter is to be mounted.
(2) Apply engine oil to the O-ring of the oil filter.
(3) Turn down the oil filter until the O-ring contacts the cylinder block surface, and then give the oil filter one more turn (or tighten with a 16 Nm torque).

NOTE
For MD135737 oil filter, the tightening torque should be 14 Nm.

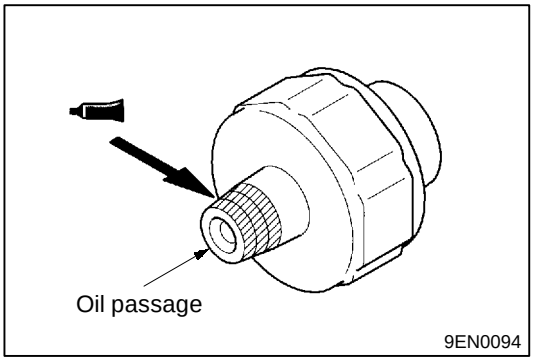

▶I◀ SEALANT APPLICATION TO SEALANT TO OIL PRESSURE SWITCH

(1) Apply sealant to the threads of the switch.

Specified sealant:
3M ATD Part No. 8660 or equivalent

Caution
- Use care not to allow the sealant to plug the oil passage.

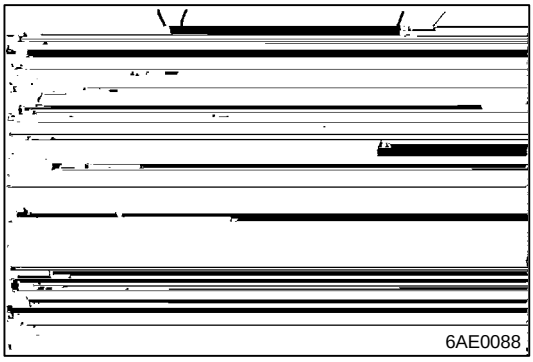

INSPECTION

OIL PUMP

(1) Check the tip clearance.

Standard value: 0.06 - 0.18 mm

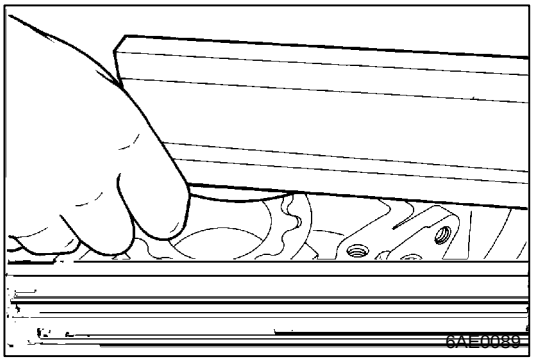

(2) Check the side clearance.

Standard value: 0.04 - 0.10 mm

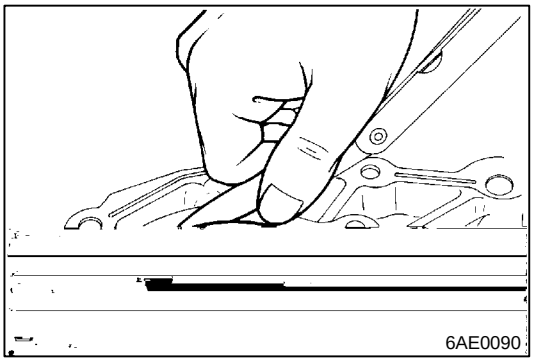

(3) Check the body clearance.

Standard value: 0.10 - 0.18 mm
Limit: 0.35 mm

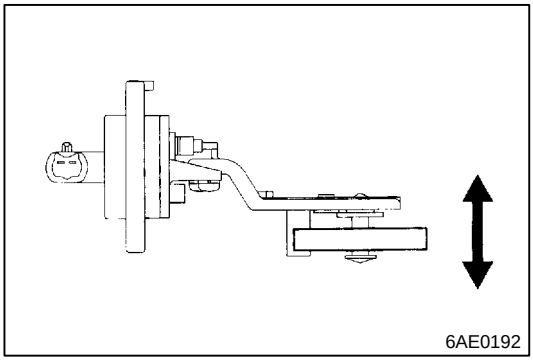

OIL LEVEL SENSOR (FOR EUROPE)

(1) Put the oil level sensor in the oil, then move the float up and down with the oil at a temperature either lower than 40°C or higher than 80°C, and check for continuity.

40°C

Float position	Switch ON/OFF
Condition when down	ON (continuity)
Condition when up	ON (continuity)

80°C

Float position	Switch ON/OFF
Condition when down	OFF (no continuity)
Condition when up	ON (continuity)

14. PISTON AND CONNECTING ROD

REMOVAL AND INSTALLATION

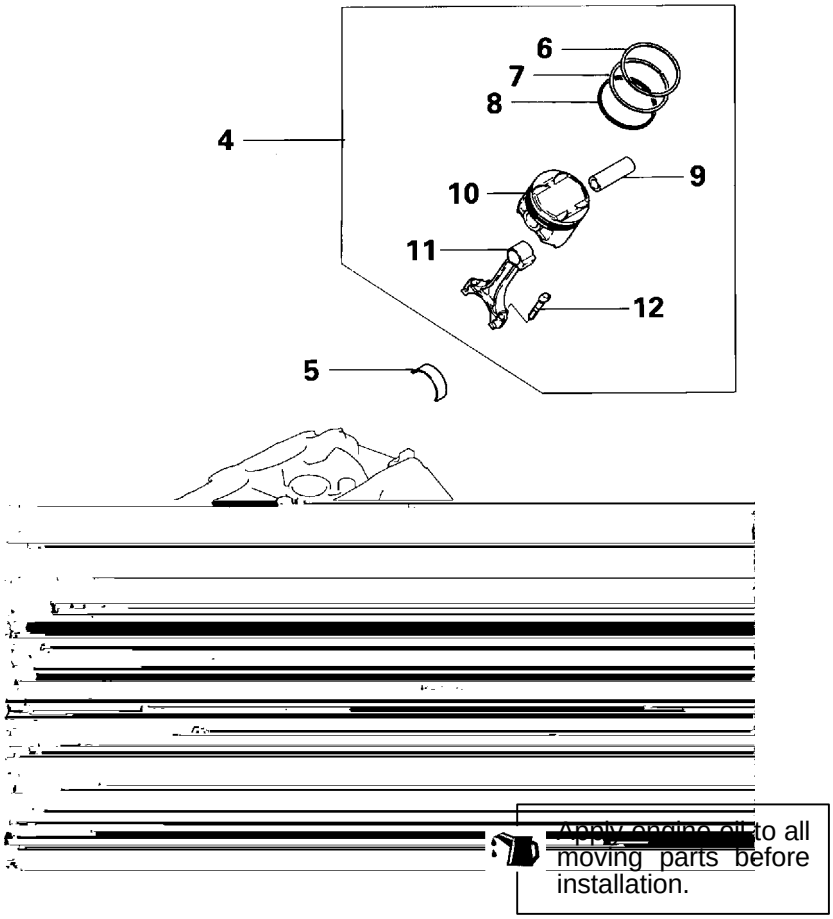

6AE0095

Removal steps

	"GA	1. Nut	
AA"	"FA	2. Connecting rod cap	
	"EA	3. Connecting rod bearing	
	"DA	4. Piston and connecting rod	
	"EA	5. Connecting rod bearing	
	"CA	6. Piston ring No.1	
	"CA	7. Piston ring No.2	
	"BA	8. Oil ring	
AB"	"AA	9. Piston pin	
		10. Piston	
		11. Connecting rod	
		12. Bolt	

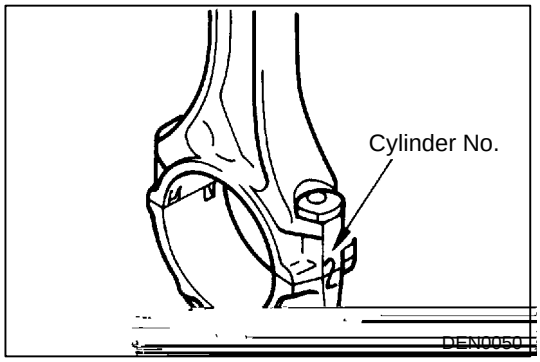

REMOVAL SERVICE POINTS

AA " CONNECTING ROD CAP REMOVAL

(1) Mark the large end of the connecting rod with the cylinder number for use during reassembly.

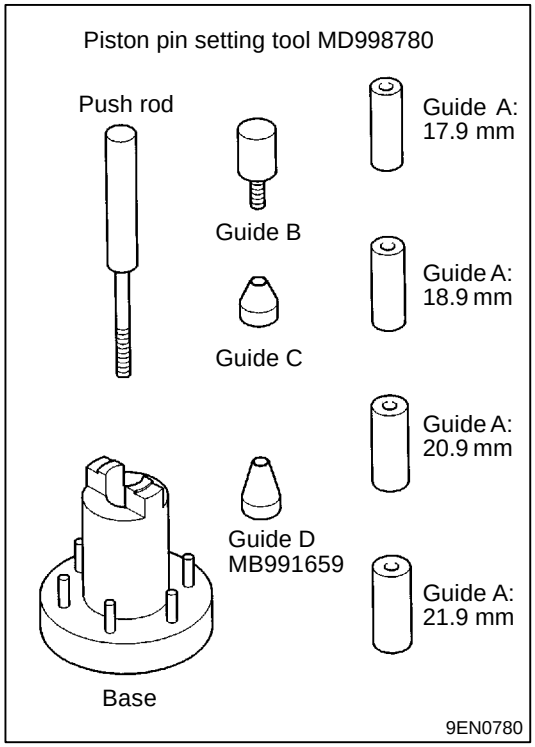

AB " PISTON PIN REMOVAL

Piston pin setting tool (MD998780) consists of the parts shown in the illustration at left.
To remove the piston pin, Guide D (MB991659) is also used in combination with the Piston pin setting tool.

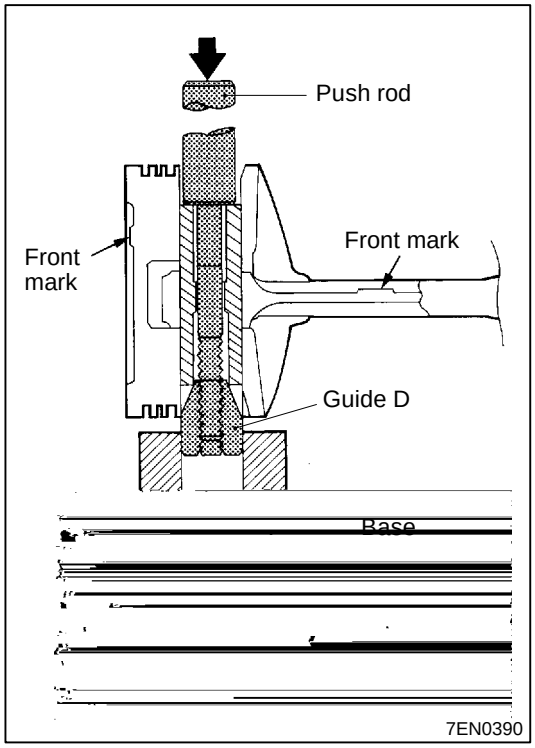

(1) Insert the Push Rod (special tool) into the piston from the side on which the front mark is stamped in the piston head, and attach the guide D to the push rod end.
(2) Place the piston and connecting rod assembly on the Piston Pin Setting Base (special tool) with the front mark facing upward.
(3) Using a press, remove the piston pin.

NOTE
Keep the disassembled pistons, piston pins and connecting rods in order according to the cylinder number.

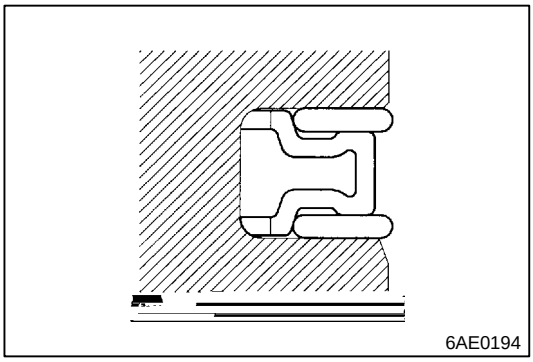

"BA OIL RING INSTALLATION

(1) Fit the oil ring spacer into the piston ring groove.

NOTE
The side rails and spacer may be installed in either direction.

(2) Install the upper side rail.
To install the side rail, first fit one end of the rail into the piston groove, then press the remaining portion into position by finger. See illustration.

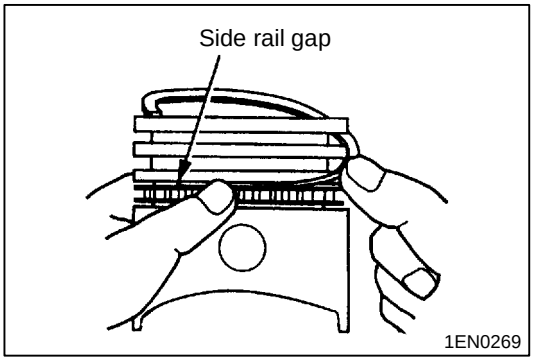

NOTE
Do not use piston ring expander when installing side rail. Use of ring expander to expand the side rail end gap can break the side rail, unlike other piston rings.

(3) Install the lower side rail in the same procedure as described in step (2).
(4) Make sure that the side rails move smoothly in either direction.

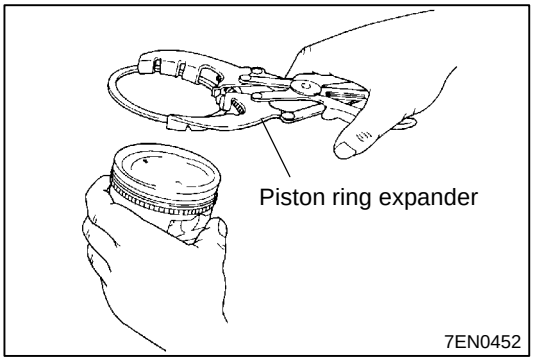

"CA PISTON RING NO. 2 / PISTON RING NO. 1 INSTALLATION

(1) Using piston ring expander, install the piston rings with their side having identification marks facing up.

Identification mark:
No. 1 ring: T
No. 2 ring: 2T

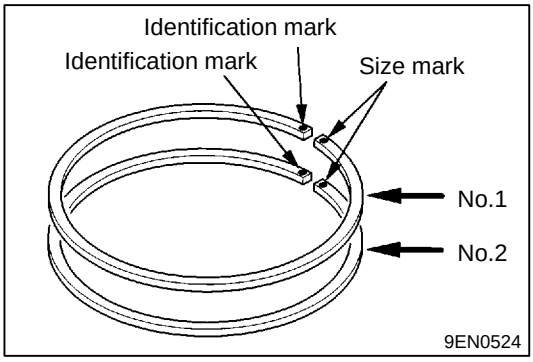

NOTE
The piston ring is stamped with the following size mark.

Size	Size mark
Standard size	None
0.50 mm O.S.	50
1.00 mm O.S.	100

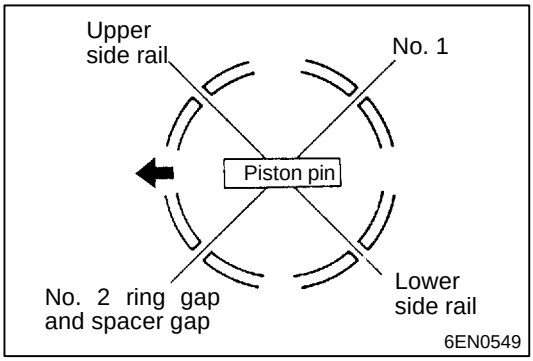

"DA PISTON AND CONNECTING ROD INSTALLATION

(1) Liberally coat engine oil on the circumference of the piston, piston ring, and oil ring.
(2) Arrange the piston ring and oil ring gaps (side rail and spacer) as shown in the figure.
(3) Rotate crankshaft so that the crank pin is on center of the cylinder bore.

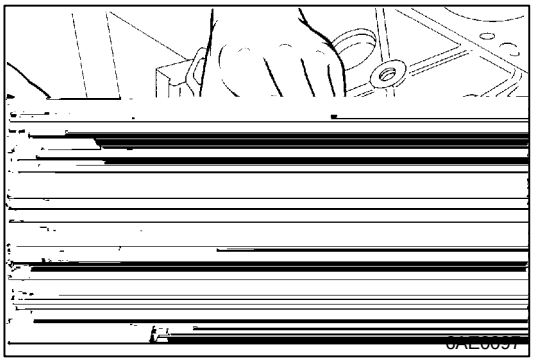

(4) Use suitable thread protectors on connecting rod bolts before inserting piston and connecting rod assembly into cylinder block. Care must be taken not to nick crank pin.
(5) Using a suitable piston ring compressor tool, install piston and connecting rod assembly into the cylinder block.

Caution
D Insert the front mark (arrow) on the top of the piston so it faces the engine front (timing belt side).

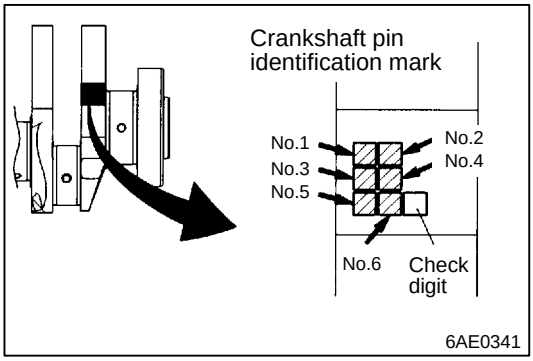

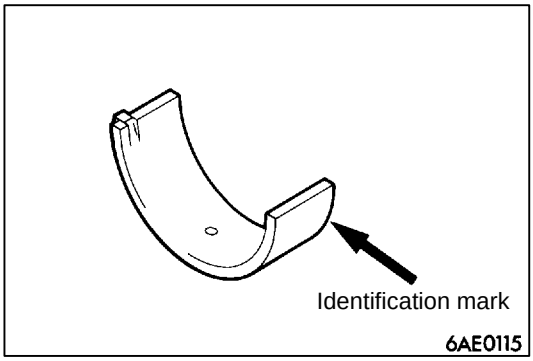

" EA CONNECTING ROD BEARINGS INSTALLATION

(1) When the bearings are to be replaced, select correct ones and install them in the correct positions according to the identification marks stamped on the crankshaft.

<6A12>

Crankshaft pin		Connecting rod bearing
Identification mark	Outer diameter mm	Identification mark
I	42.995 - 43.000	1
II	42.985 - 42.995	2
III	42.980 - 42.985	3

<6A13>

Crankshaft pin		Connecting rod bearing
Identification mark	Outer diameter mm	Identification mark
I	50.995 - 51.000	1
II	50.985 - 50.995	2
III	50.980 - 50.985	3

" FA CONNECTING ROD CAP INSTALLATION

(1) Mate the correct bearing cap with the correct connecting rod by checking with the alignment marks marked during disassembly. If a new connecting rod is used which has no alignment mark, position the notches for locking the bearing on the same side.

15. CRANKSHAFT, CYLINDER BLOCK, FLYWHEEL AND DRIVE PLATE

REMOVAL AND INSTALLATION

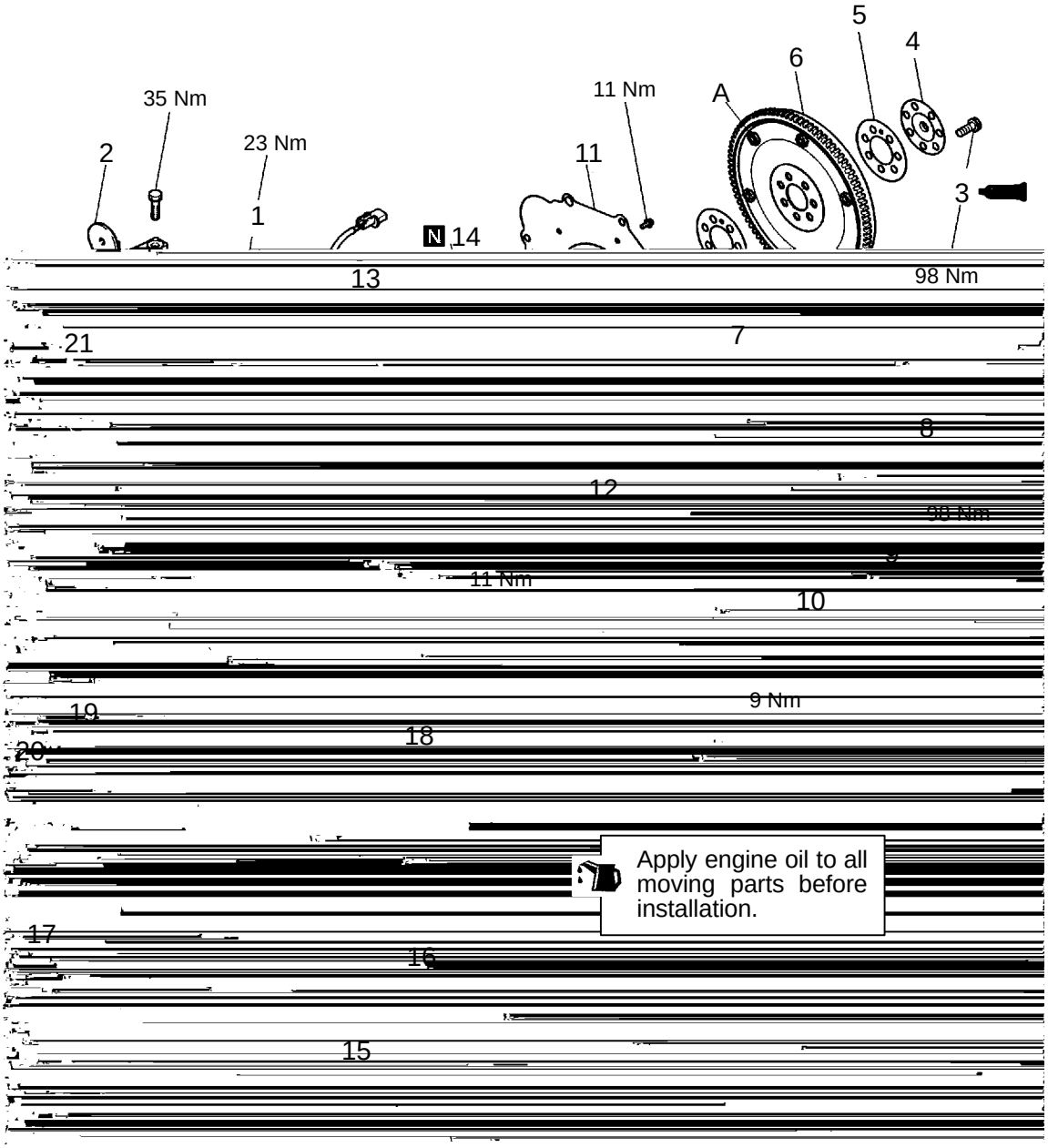

Removal steps

1. Detonation sensor
2. Idler pulley bracket <M/T>
3. ▶E◀ Flywheel bolt <M/T>
4. Plate <M/T>
5. Adapter plate <M/T>
6. Flexible flywheel <M/T>
7. Adapter plate <M/T>
8. ▶E◀ Drive plate bolt <A/T>
9. Adapter plate <A/T>
10. Drive plate <A/T>
11. Rear plate
12. Bell housing cover <MIVEC>
13. ▶D◀ Oil seal case
14. ▶C◀ Oil seal
15. ▶B◀ Bearing cap bolt
16. ▶B◀ Bearing cap
17. ▶A◀ Crankshaft bearing, lower
18. Crankshaft
19. ▶A◀ Thrust bearing
20. ▶A◀ Crankshaft bearing, upper
21. Cylinder block

Caution

On the flexible wheel equipped engines, do not remove any of the bolts “A” of the flywheel shown in the illustration.

The balance of the flexible flywheel is adjusted in an assembled condition. Removing the bolt, therefore, can cause the flexible flywheel to be out of balance, giving damage to the flywheel.

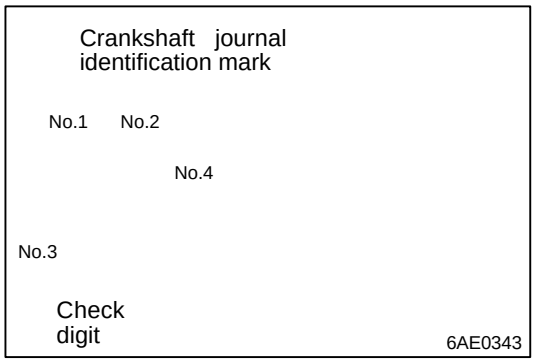

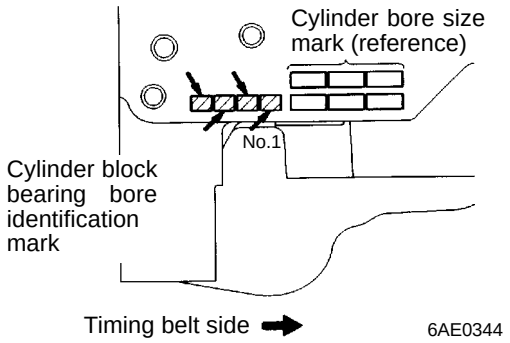

INSTALLATION SERVICE POINTS

▶A◀ CRANKSHAFT BEARING INSTALLATION

(1) When replacing bearing, select a one of proper size according to the identification marks stamped on both crankshaft and cylinder block.

<6A12>

Crankshaft Journal		Cylinder Block Bearing Bore		Crankshaft Bearing
Identi-fication mark	Outer diameter mm	Identifi-cation mark	Inner diameter mm	Identifica-tion mark
1	52.994 - 53.000	0	57.000 - 57.006	1
		1	57.006 - 57.012	2
		2	57.012 - 57.018	3
2	52.988 - 52.994	0	57.000 - 57.006	2
		1	57.006 - 57.012	3
		2	57.012 - 57.018	4
3	52.982 - 52.988	0	57.000 - 57.006	3
		1	57.006 - 57.012	4
		2	57.012 - 57.018	5

<6A13>

Crankshaft Journal		Cylinder Block Bearing Bore		Crankshaft Bearing
Identi-fication mark	Outer diameter mm	Identifi-cation mark	Inner diameter mm	Identifica-tion mark
1	55.994 - 56.000	0	60.000 - 60.006	1
		1	60.006 - 60.012	2
		2	60.012 - 60.018	3
2	55.988 - 55.994	0	60.000 - 60.006	2
		1	60.006 - 60.012	3
		2	60.012 - 60.018	4
3	55.982 - 55.988	0	60.000 - 60.006	3
		1	60.006 - 60.012	4
		2	60.012 - 60.018	5

(2) Install the bearings having an oil groove to the cylinder block.
(3) Install the bearings having no oil groove to the bearing caps.
(4) Install the thrust bearings at the No. 3 upper bearing with the grooved side toward the crank web.

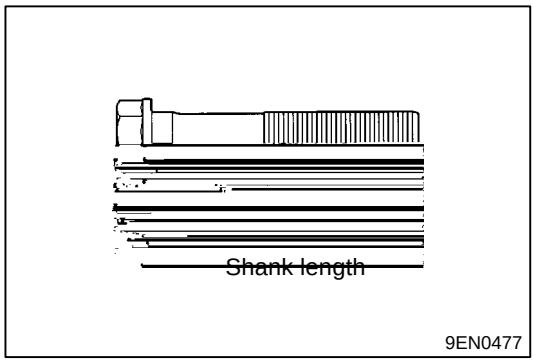

▶B◀ BEARING CAP / BEARING CAP BOLT INSTALLATION

(1) Install the bearing caps so that their arrows are positioned on the timing belt side.
(2) When installing the bearing cap bolts, check that the shank length of each bolt meets the limit. If the limit is exceeded, replace the bolt.

Limit: max. 71.1 mm

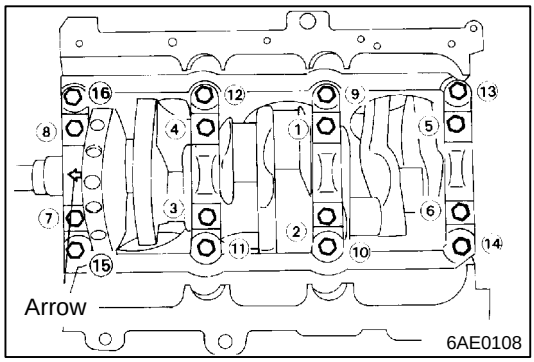

(3) Apply engine oil to the threaded portion and bearing surface of the bolt.
(4) Tighten the bearing cap bolts to 25 Nm torque in the tightening sequence.

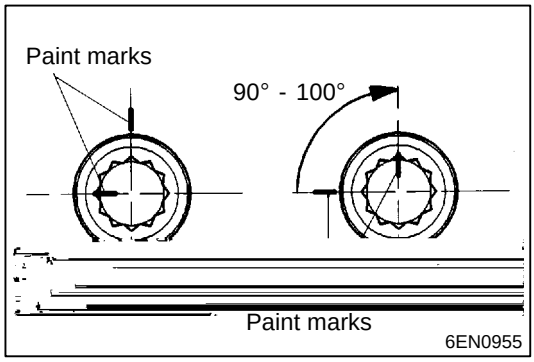

(5) Make a paint mark on the head of each nut.
(6) Make a paint mark on the area around the bolt bearing surface at location 90° to 100° in the direction of tightening the bolt.
(7) Give a 90° to 100° turn to the bolts in the tightening sequence. Make sure that the paint mark on the bolt and that on the area around the bolt bearing surface are in alignment.

Caution
- If the bolts are tightened by an angle of less than 90°, they may not hold the cap with sufficient strength.
- If a bolt is tightened by an angle exceeding 100 °, completely remove all the bolts and carry out the installation procedure again from step (1).

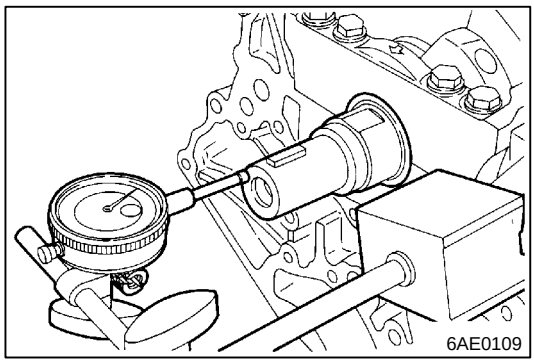

(8) After installing the bearing caps, make sure that the crankshaft turns smoothly and the end play is correct. If the end play exceeds the limit, replace crankshaft bearings.

Standard value: 0.05 - 0.25 mm
Limit: 0.4 mm

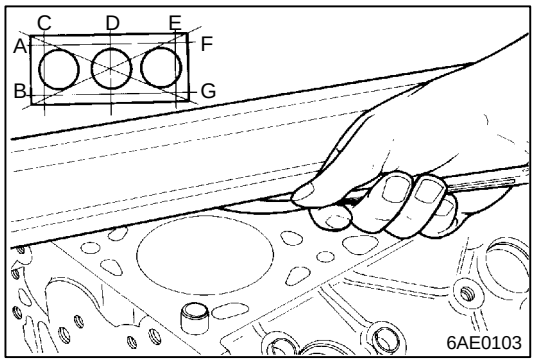

CYLINDER BLOCK

(1) Using a straightedge and feeler gauge, check the block top surface for warpage. Make sure that the surface is free from gasket chips and other foreign matter.

Standard value: 0.05 mm or less
Limit: 0.1 mm

(2) If the distortion is excessive, correct within the allowable limit or replace.

Grinding limit: 0.2 mm
The total thickness of the stock allowed to be removed from cylinder block and mating cylinder head is 0.2 mm at maximum.

Cylinder block height (when new):
6A12 190 mm
6A13 209 mm

(3) Check cylinder walls for scratches and seizure. If defects are evident, correct (bored to oversize) or replace.

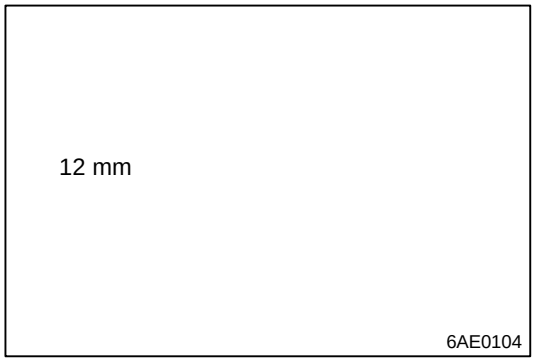

(4) Using cylinder gauge, measure the cylinder bore and cylindricity. If worn badly, correct cylinder to an oversize and replace piston and piston rings. Measure at the points shown in illustration.

Standard value:
Cylinder I.D.:
6A12 78.40 - 78.43 mm
6A13 81.00 - 81.03 mm
Out-of-roundness and taper of cylinder bore:
0.01 mm or less

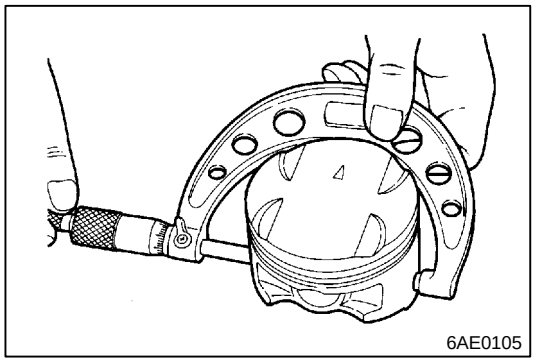

BORING CYLINDER

(1) Oversize pistons to be used should be determined on the basis of the largest bore cylinder.

Piston size identification

Size	Identification mark
0.50 mm O.S.	0.50
1.00 mm O.S.	1.00

NOTE
Size mark is stamped on piston top.

(2) Measure outside diameter of piston to be used. Measure it in thrust direction as shown.

(3) Based on measured piston O.D. calculate boring finish dimension.

Boring finish dimension = Piston O.D. + (Clearance between piston O.D. and cylinder) - 0.02 mm (honing margin)

(4) Bore all cylinders to calculated boring finish dimension.

Caution

- To prevent distortion that may result from temperature rise during honing, bore cylinders, working from No. 1, No. 2, No. 3, No. 4, No. 5 and No. 6

(5) Hone to final finish dimension (piston O.D. + clearance between piston O.D. and cylinder.)

(6) Check clearance between piston and cylinder.

Clearance between piston and cylinder:
0.02 - 0.04 mm

NOTE
When boring cylinders, finish all of four cylinders to same oversize. Do not bore only one cylinder to an oversize.

NOTES